NO. 64 NOTES FROM THE SHOP $3.50

Woodsmith®

No. 64 August, 1989

Woodsmith

Editor **Donald B. Peschke**
Design Director **Ted Kralicek**
Managing Editor **Douglas L. Hicks**
Assistant Editors **Douglas M. Lidster**, **Kent A. Buckton**, **Terry J. Strohman**
Project Designer **Ken Munkel**
Technical Illustrators **David Kreyling**, **Cary Christensen**, **Rod Stoakes**, **Chris Glowacki**
Customer Service **Sandy Baum, Mgr.**, **Jackie Stroud**, **Pat Koob**, **Lisa Thompson**
Project Supplies **Leslie Ann Gearhart**
Controller **Paul E. Gray**
Computer Operations **Ken Miner**
Administrative Assts. **Cheryl Scott**, **Jean Carey**
Building Maintenance **Archie Krause**

WOODSMITH STORES

General Manager **Steve Krohmer**
Marketing Manager **Steve Dozier**
Store Managers:
St. Louis, MO **Jon Behrle**
Berkeley, CA **Michael DeHaven**
Des Moines, IA **Kent Welsh**

WOODSMITH (ISSN 0164-4114) is published bimonthly (February, April, June, August, October, December) by Woodsmith Publishing Co., 2200 Grand Ave., Des Moines, IA 50312.
Woodsmith is a registered trademark of Woodsmith Publishing Co.
©**Copyright 1989** by Woodsmith Publishing Co. All Rights Reserved.
Subscriptions: One year (6 issues) $15.95, Two Years (12 issues) $27.95. Canada and Foreign: add $2 per year, U.S. funds only. Single copy price, $3.50.
Second Class Postage Paid at Des Moines, Iowa.
Postmaster: Send change of address to Woodsmith, Box 491, Mt. Morris, IL 61054.
SUBSCRIPTION QUESTIONS? Call 800-435-0715 (IL residents: 800-892-0753). 7:30 AM to 8:30 PM, CST, weekdays.
SAMPLE COPY: We will send a free sample copy of *Woodsmith* to anyone. Just send us his/her name and address.

EDITOR'S COLUMN

Sawdust

What's the most difficult thing about building a chair?

The joinery? Maybe . . . because you're faced with a lot of mortise and tenon joints. Although they're not the easiest joint to make, they're not that difficult either. If you can drill a series of holes, you've just about got a mortise made. And if you can cut a rabbet on the end of a board, you're halfway to forming a tenon.

Well, how about the curved pieces on a chair? Most chairs have curved back legs or curved slats on the back that conform to the shape of the occupant. Anything that's curved is a little more difficult to make. And there's also the image of bending the pieces to the curved shape. But curved pieces don't have to be *bent* pieces. The curved pieces on the chairs shown in this issue are easily cut on a band saw.

Okay, you can cut a curved back leg on a band saw, but it's an odd shape that's almost a free-form sculpture. How do you cut that? Actually, it's probably the easiest part of the chair to cut — if you use a template. Even an exotically curved leg can be cut on a band saw just by following a template. And the same template can be used to do the final smoothing and shaping on a router table.

How about the upholstery? Because I was working with fabric, I had this vision of learning how to sew. But the upholstery for these chairs requires no sewing skills. Basically, if you can use a staple gun, you can upholster these chairs.

Okay Don, then what is the biggest problem when it comes to building a chair? I think it's the *combination* of all these things (joinery, cutting curves, upholstery) that creates apprehension. Yet it also creates intrigue because it's not typical woodworking.

Like most projects, when taken one step at a time, chair building is not all that demanding. But in the process of building these chairs, I discovered two things I didn't really anticipate.

First, chair building takes a lot of time. It took me about 100 hours to build and finish a set of six chairs. That's not a lot of time *per chair*, but the hours tend to add up when you build a *set* of chairs. You're actually building a lot of individual projects — they all happen to be the same.

That leads to the second discovery. Although chair building may not be *mass* production, it is *multiple* production. Each piece for the first chair must be a clone of the pieces for all the other chairs. To get this kind of repeatability means using templates and production techniques to ensure identical shapes.

I found that using a template was the key. We've included an article (page 18) on the basic technique of how to use a template to make the back legs for the chairs. But this technique applies to any project that needs several pieces — all identical.

EXTENSION TABLE. Although the chairs required some ingenuity to figure out the technique to repeat shapes, the table we built to accompany the chairs required ingenuity of design.

What we wanted was an extension table — one in which leaves could be added to extend the size of the table. The problem was that I've never been particularly fond of typical extension tables. The top is usually cut in half so the two halves can be pulled apart to add the extension leaves.

This type of table works, but it seems a shame to cut the table top in half just to extend it a few times a year (usually on Thanksgiving, Christmas, and family reunions). The rest of the time you have to contend with that crack in the middle of the table.

The solution: Build a table with a solid top (not cut in half) and put the leaves on runners so they can be pulled out at the *ends* of the table to extend its size.

This system is nothing new. But it is sort of a mind-twister to explain. The idea is that the extension leaves are on runners. These runners are mounted at an angle under the table top. When you lift up the top (it just "floats" on the legs and aprons), the extension leaf can be pulled out. Since the runners are mounted at an angle, the leaf will raise up to be level with the surface of the table top.

It also means the leaves are always part of the table — not stored in the closet where they might warp or could be scratched. All in all, this extension design makes a nice dining room table for the 362 days a year when the leaves are *not* extended.

NEW FACES. There comes a time when a business needs financial guidance. If nothing else, you have to know where you stand, and predict where you're going. That means accounting.

Paul Gray has joined us as our corporate controller. Fortunately, he's also a woodworker (and was a subscriber to *Woodsmith* even before he was hired), so he has an understanding why we spend so much money on wood and power tools.

NEXT ISSUE. The next issue of *Woodsmith* (No. 65) will be mailed during the week of October 30, 1989.

Tips & Techniques

ALIGNING DRAWER FRONTS

In *Woodsmith* No. 62 you showed how to align false drawer fronts in a cabinet using a four-screw method. I use a similar method when mounting a drawer front that has a hand pull with mounting screws. The mounting holes for the hand pulls serve as the adjustment holes for the false front.

To use this method, first drill four countersunk shank holes through the back of the drawer front (for the screws that will hold the false front in place), see Fig. 1a. After these holes have been drilled, drill two holes for the pull through the false front.

Next, temporarily clamp the false front onto the front of the drawer. Now comes the trick. Stick an awl through the pull holes in the false front to mark their location on the real front. Then remove the clamps and drill ½"-diameter holes at the marks through the drawer front *only* (not the false front).

To align the false front, mount it with two roundhead screws that go through the pull mounting holes (in the false front) and through the ½"-dia. holes (in the drawer front) and finally into a scrap block (inside the drawer), see Fig. 1.

To adjust the false front, place the drawer in the cabinet. If it needs adjustment, pull the drawer out and gently tap the false front with a mallet. Once it's aligned, secure it with screws through the countersunk holes.

After screwing the false front in place, remove the scrap block, and install the pull, see Fig. 2.

Harvey Freeman
Halifax, Nova Scotia

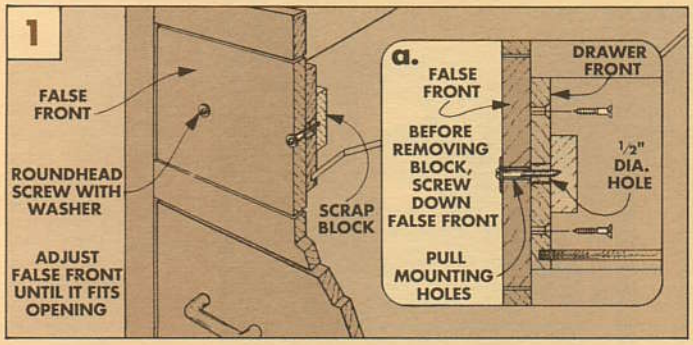

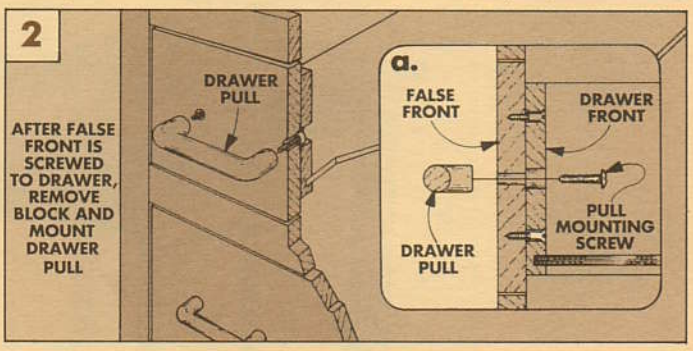

BENCH STOP

At times I want to plane or scrape a project on my workbench, but I don't have a dog system or an end vise to stop the piece.

To solve this, I made a simple bench stop out of thin hardwood scrap, then screwed it to the end of my workbench.

This works fine, but there are times when I don't want the stop sticking up above the top surface of the bench. So, I altered the bench stop so it could drop down out of the way.

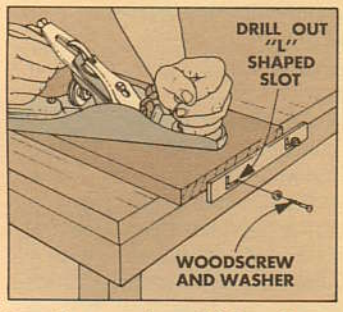

To do this, drill a series of ⅛"-dia. holes in the shape of an "L", near each end of the stop. Then clean the L-shapes out using a chisel.

To attach the stop to the workbench, position the top edge of the stop flush with the top of the workbench. Now tighten the stop to the bench using two No. 8 x 1" roundhead screws with washers placing the screws at the *top* of the "L" slot. Keep the screws just loose enough so that the stop can be raised and lowered.

To use the bench stop, lift it straight up until the screws bottom out in the "L." Then to lock it in place, slide it left to the end of the "L," see drawing.

This bench stop worked so well for me, I added another stop on the adjacent edge of the bench. Now I have two stops at 90° from each other, which is handy for squaring up two frame pieces into the corner.

Clifford Hicks
Brevard, North Carolina

CLEAN ROUTING

Sometimes when using the router table, it's tough to get a clean finished cut that doesn't burn. To get a good cut, I use a two-pass system—but I only have to make *one* setting for the height of the router bit.

To do this, first set the router bit to cut at the *full height* and check it with a test piece of scrap. After the height of the bit is set, tape a piece of cardboard (approximately 1/32"-thick) to the top of the router table, in front of the bit. The cardboard should be about as long as the table and just a little wider than the workpiece.

With the cardboard in place, the workpiece will be raised slightly so the first cut does not cut to the complete finished depth. Then, to make the finish cut, remove the cardboard. This lowers the workpiece so your next cut will be a full cut.

Dave Worthen
Springfield, Ohio

CLAMP PADS

Placing clamping blocks between pads on a C-clamp and the project (to protect the surface) usually takes three hands. One to hold the C-clamp and another two to hold the blocks while trying to tighten down the clamps.

To solve this problem, I use self-sticking pieces of round felt on the pads of my C-clamps. These inexpensive pads are used on the bottom of jewelry boxes and found in most hardware stores in a variety of diameters.

Robert Anderson
Chandler, Arizona

SEND IN YOUR TIPS

If you'd like to share a tip with others, send in your idea to Woodsmith, Tips & Techniques, 2200 Grand Ave., Des Moines, Iowa 50312.

We pay $15 for accepted tips. Please send an explanation and a sketch if needed (we'll draw a new one).

Dining Table

It looks like a standard Danish Modern table. But beneath the top are two extension wings that add another 43" to the overall length. But wait a minute... how do those extensions actually work?

The biggest problem with this table is trying to explain how it works. I had such a hard time explaining the design to everyone, that I finally went down to the shop and just built it.

When I finished, everyone said, "That's nice Don, but I thought you said this table had leaves?" I couldn't resist showing off a little; I simply lifted one end of the free floating top and pulled the leaf from *under the table*. I didn't even get a chance to pull out the other leaf before someone lifted the table top off to see how it worked.

HOW IT WORKS. On most extension tables the table top is cut in half and each half is attached to some sort of runners. To extend the table you pull the halves apart and the leaves drop in — on top of the runners.

With this table the *leaves* are attached to the runners. When you want to extend the table, lift up one end of the top and pull out a leaf. When the leaf is fully extended the top drops down and rests on top of the runners.

Once you understand how the runners work, building this table is very straight forward. The joinery isn't complicated and the only hardware you need is four hanger bolts and a few screws.

CUTTING THE TOP. The top and the leaves on this table are cut from a single sheet of oak plywood. To make the grain of the plywood top match up with the leaves, I laid out my cuts as if the leaves were part of the top, see the Cutting Diagram.

Since the leaves fit under the table top (when in the stored position), they are slightly smaller (narrower) than the top, see the Detail in the Exploded View.

THE LEGS. One other interesting feature on this table is the legs, and how they're mounted to the aprons. The legs are mounted so they stand at a 45° angle. They're mounted to the table's aprons with corner blocks and hanger bolts. This makes them removable and they can also be tightened if they loosen over time.

FINISH. To provide the table with extra protection I used two coats of polyurethane, sanding between coats.

EXPLODED VIEW

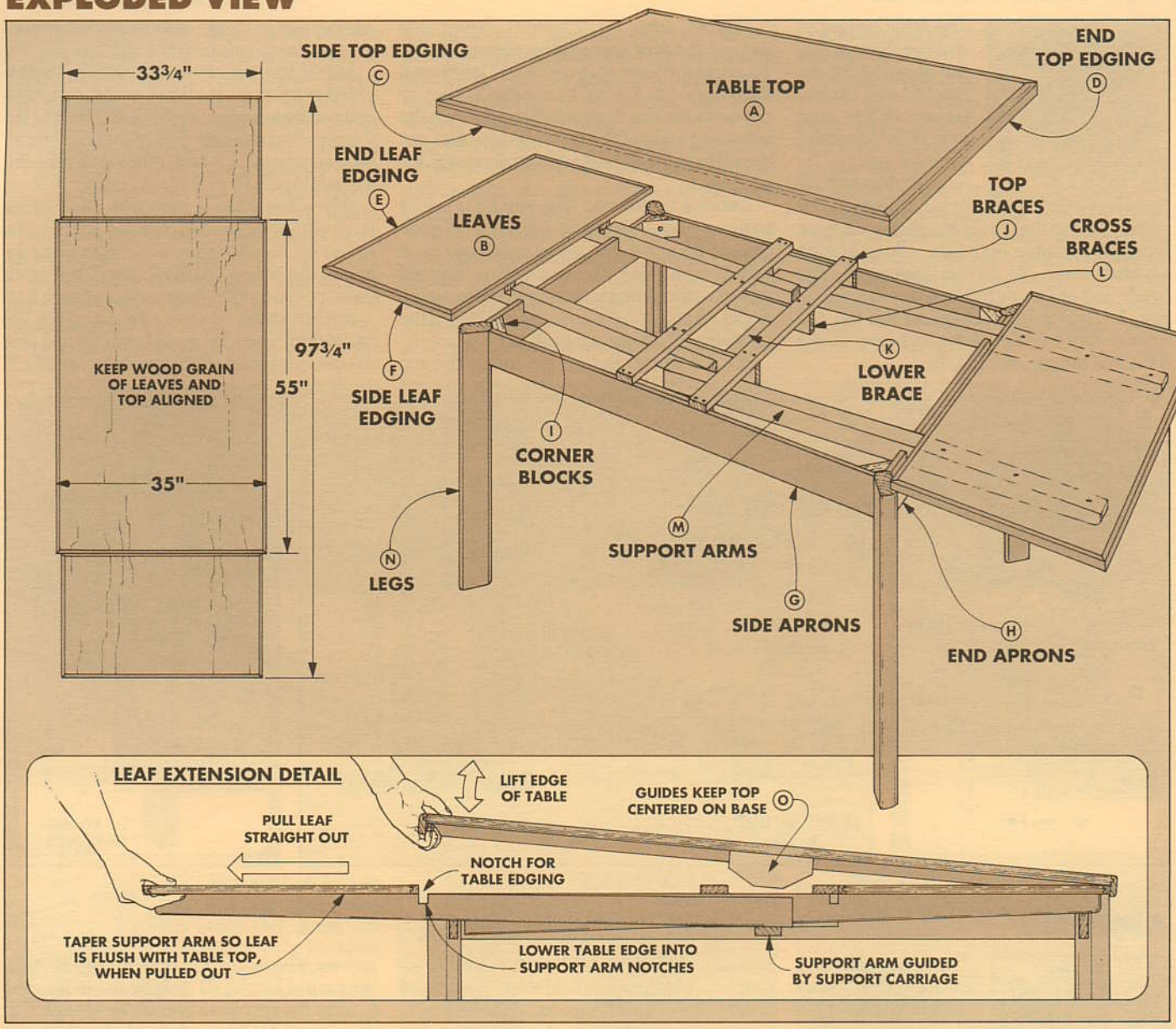

MATERIALS LIST

A	Top (1)*	¾ x 34¼ - 54¼
B	Leaves (2)*	¾ x 20⅝ - 33
C	Side Top Edging (2)	½ x 1⅝ - 56 rgh.
D	End Top Edging (2)	½ x 1⅝ - 36 rgh.
E	End Leaf Edging (4)	½ x ⅞ - 35 rgh.
F	Side Leaf Edging (4)	½ x ⅞ - 22½ rgh.
G	Side Aprons (2)	¾ x 3½ - 47¾
H	End Aprons (2)	¾ x 3½ - 27¾
I	Corner Blocks (4)	1¾ x 3 - 4
J	Top Braces (2)	¾ x 2 - 29¾
K	Lower Brace (1)	¾ x 2 - 28¼
L	Cross Braces (4)	¾ x 2½ - 10¾
M	Support Arms (4)	1¾ x 2¼ - 49½
N	Legs (4)	1¾ x 3 - 27½
O	Guides (2)	¾ x 2½ - 6⅝

* These pieces are ¾" plywood.

CUTTING DIAGRAM

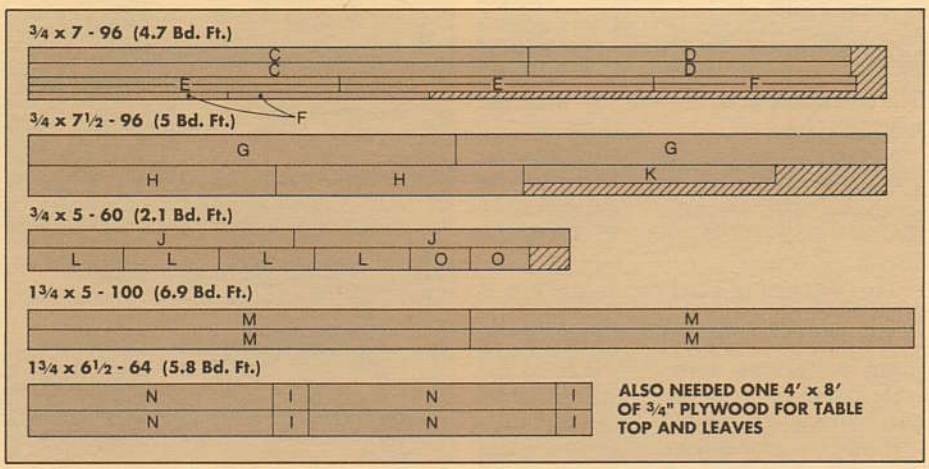

ALSO NEEDED ONE 4' x 8' OF ¾" PLYWOOD FOR TABLE TOP AND LEAVES

TOP AND LEAVES

The table begins by making the top. I cut the plywood for the **top (A)** and the two **leaves (B)** to size, refer to the Exploded View on page 5.

ROUT TONGUE. In order to mount the edging pieces that cover the plywood edges, I routed a tongue on all the edges of each plywood piece. To do this, mount an edge guide and ½" straight bit in the router, see Fig. 1. Then rout a rabbet on the top and bottom faces of the plywood to produce a ⅛"-thick tongue, see Fig. 1a.

EDGING. After the tongue is routed, you can cut the four **top edging pieces (C,D)**. These pieces are resawn to ½" thick and then ripped to 1⅝" wide, see Fig. 2. They're cut to rough length about 2" longer than the sides and ends of the plywood top. Also cut the eight ⅞"-wide **leaf edging pieces (E,F)**, see Fig. 2.

GROOVE IN EDGING. The edging is joined to the plywood pieces by cutting a ⅛"-wide groove (to match the tongue) on the inside face of each piece. The groove is positioned so when the edging is mounted, the top edge sticks up about 1/16" above the top face of the plywood. (It's trimmed flush later.)

ROUND EDGE. Before mounting the top edging pieces (C,D), also rout a ⅛" round-over on the *inside* bottom edge, see Fig. 2.

APPLY EDGING. Now the edging can be glued and clamped to the plywood. Miter the ends of the top edging pieces (C,D) and glue them to the table top (A). (For some tips on this, see page 11.) Also miter and glue the leaf edging (E,F) to the leaves (B).

When the glue is dry, trim the edging flush with the plywood. (I used a flush trim router jig, see *Woodsmith* No. 62.) The edging on the leaves (B) is trimmed flush with both the top and the bottom face of each leaf.

ROUND OVER EDGING. To complete the top edging, use a ½" round-over bit and rout the *outside* top and bottom edges, see Fig. 3.

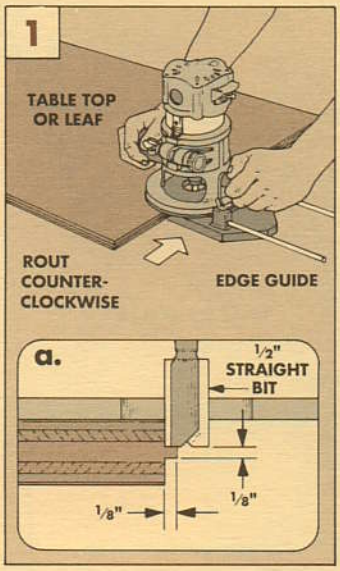

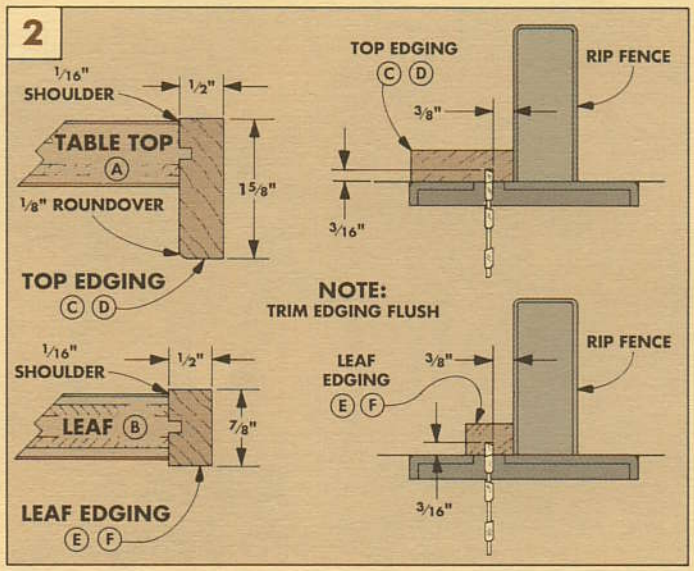

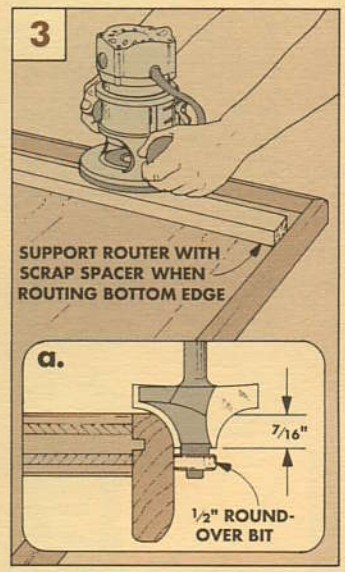

APRONS

The next phase is to make the four aprons that hold the legs together. The **side aprons (G)** are very easy — just cut two pieces of ¾"-thick stock 3½" wide by 47¾" long. The **end aprons (H)** are also 3½" wide, but only 27¾" long.

NOTCH END APRONS. After the end aprons are cut to length, you have to lay out the location of two notches. These notches allow the leaf supports to be pulled out, refer to the Exploded View.

The notches in each end apron are in different positions so that the leaf supports will bypass each other under the table. To make the notches, raise the blade on the table saw to cut 1 9/16" deep. Then make repetitive passes to waste out the notches.

After the notches have been cut, use a rasp to form a slight bevel on the bottom of all four notches. This bevel should slope toward the *inside* face of the end aprons (H), see Fig. 5.

KERFS FOR SPLINES. To complete the aprons, kerfs are cut at both ends of all four aprons. These kerfs match up with kerfs in the corner blocks (I) so splines can be used to align the aprons to the corner blocks. Cut these kerfs 1¼" from the end of each apron, ¼" deep, see Fig. 4.

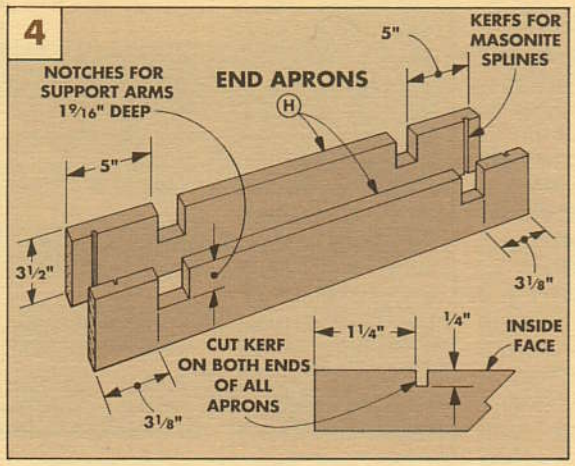

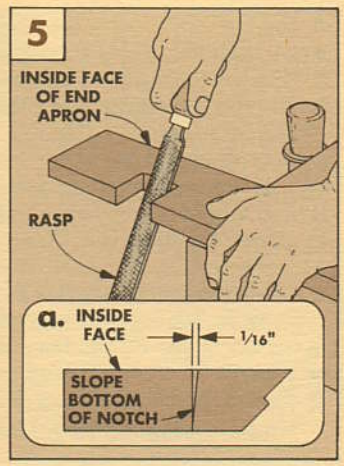

CORNER BLOCKS

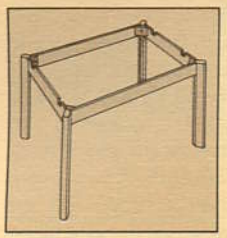

The Table aprons are held together at each corner with a **corner block (I)**. Since the corner blocks are cut from the same size stock as the legs (N), I made the leg blanks 4" longer than needed and cut a corner block (I) off the end of each leg blank.

CUT THE BLOCKS. So start by cutting four leg blanks from 1¾"-thick stock. Cut the blanks to a width of 3" and a length of 31¾".

Then to make the corner blocks, set the saw blade at 45° and cut a bevel off one end of each leg blank, see Fig. 6. Now turn the leg blank over and cut it again to form a triangular-shaped piece so one corner has a ½"-wide flat face, see Fig. 6a.

KERF THE BLOCKS. The corner blocks are kerfed to accept ⅛" Masonite splines. These splines align the corner blocks to the kerfs in the aprons (G,H).

Start by positioning the saw fence 1½" from the blade, and setting the blade height to ¼", see Fig. 7a. Then cut a kerf in both beveled sides of the corner blocks, see Fig. 7. Note: The kerfs in the aprons are only 1¼" from the end of the apron so the corner block is set back from the ends of the aprons, refer to Fig. 8a.

SHANK HOLE. Later, the legs are mounted to the corner blocks with ⅜"-dia. hanger bolts. To prepare for mounting these bolts, drill a ⅜"-dia. shank hole on the drill press. Center the hole on the inside face of the corner block, see Fig. 8.

ASSEMBLE THE APRONS. Now the aprons can be assembled by gluing and clamping the corner blocks in place with ⅛" Masonite splines, see Fig. 8a. I used a clamping block to support the C-clamp and hold the corner square. (See Shop Notes on page 10 for more on this technique.)

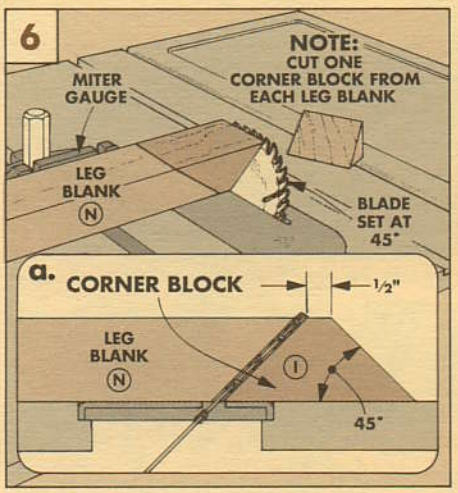

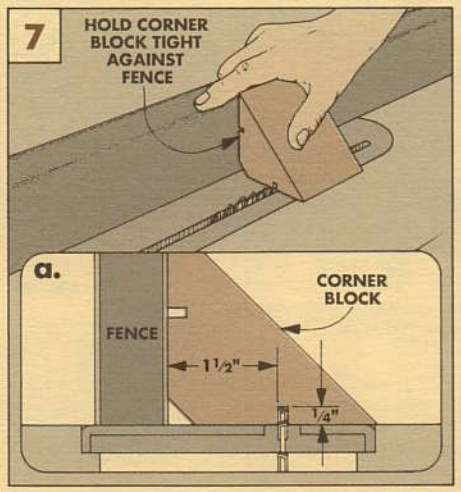

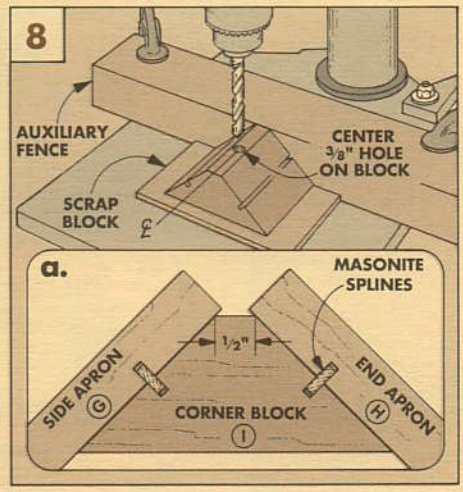

LEGS

The next step is to cut and shape the **legs (N)**. First, cut them to a finished length of 27½".

CHAMFER LEGS. The inside edges of each leg (N) are chamfered so the leg can butt against the aprons at a 45° angle.

Begin by setting the blade to 45° and position the saw fence 1" from the blade, see Fig. 9a. Now, cut a chamfer on one edge, then turn the piece around and chamfer the other edge. This should leave a ¼"-wide flat on the inside face of the leg, see Fig. 9.

ROUND EDGES. After the legs are chamfered, I routed both *outside* edges with a ½" round-over bit, see Fig. 9.

PILOT HOLES. The legs are joined to the corner blocks with a ⅜"-dia. hanger bolt. To do this, drill a pilot hole 1½" down from the top and centered on the ¼" flat on the inside face of the leg, see Fig. 10.

Now, attach the leg to the corner block by screwing in a hanger bolt, see Fig. 11. (For details, see Shop Notes, page 11.)

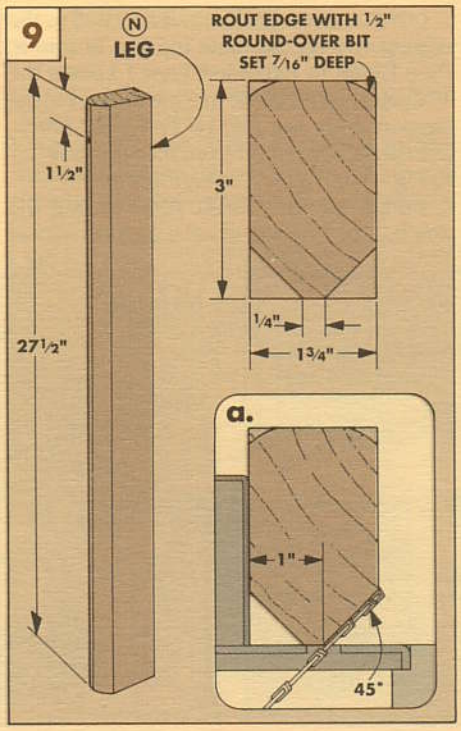

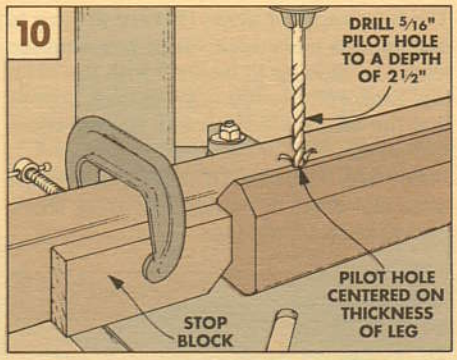

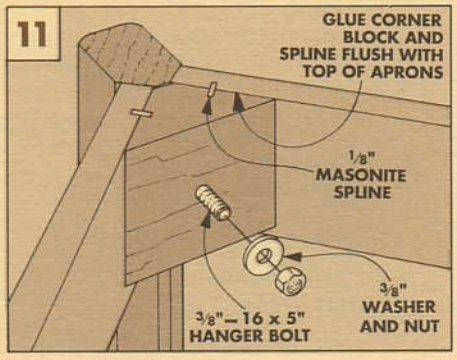

SUPPORT ARM CARRIAGE

With the legs (N) attached to the apron assembly, I started working on the support carriage which guides the support arms (M).

CUT PIECES TO SIZE. All the pieces for the support carriage are made from ¾"-thick stock. Start by cutting four **cross braces (L)** 2½" wide by 10¾" long. Next, cut two **top braces (J)** 2" wide by 29¾" long. Then cut a **lower brace (K)** 2" wide by 28¼" long.

ATTACH CROSS BRACES. When all the pieces are cut to size, screw two of the cross braces (L) to the inside faces of the side aprons (G), see Fig. 13. Center the brace on the length of the apron and screw it to the apron so the top edges are flush, see Fig.12a.

LOWER BRACE. With the cross braces attached, turn the table over and screw the lower brace (K) to the center of the cross braces (L), see Fig. 13a.

TOP BRACES. Now turn the table over and screw the two top braces (J) to the top of the aprons. They should be flush with the outside of the aprons and their edges flush with the ends of the cross braces (L), see Fig. 13.

Next, slide the remaining two cross braces (L) between the top braces (J) and the lower brace (K) and screw them in place.

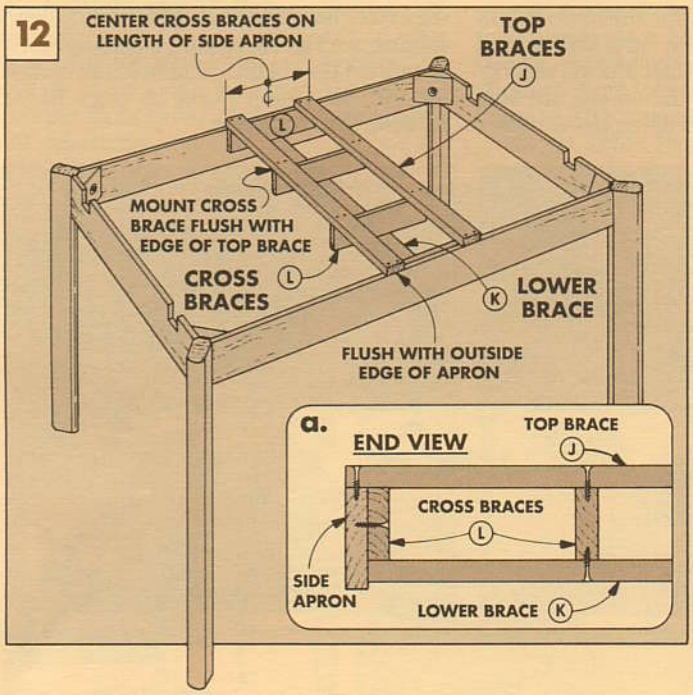

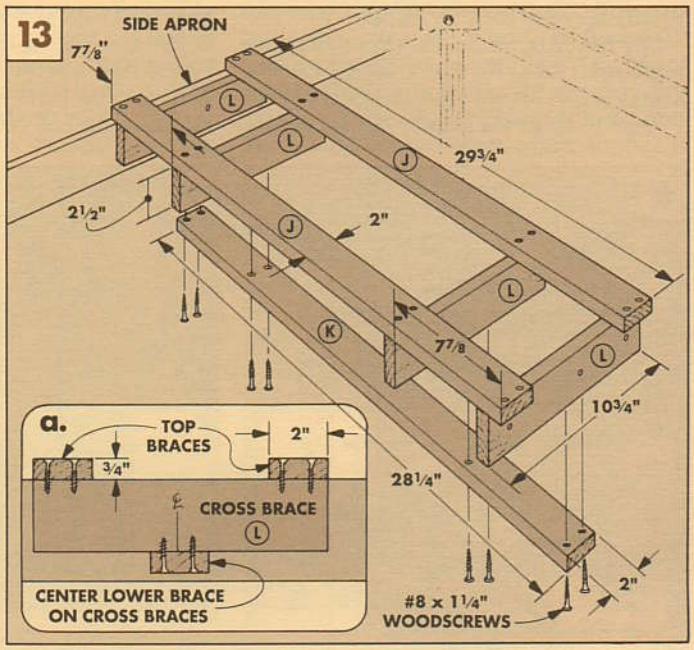

SUPPORT ARMS

The four **support arms (M)** are the key to making this table work. Since you want the leaves to slide up to be level with the main top, I tapered the top edge of each arm so that the leaves are level with the top when extended.

CUT THE BLANKS. To make the support arms (M) begin by cutting 1¾"-thick stock, 2¼" wide by 49½" long.

CUT NOTCHES. Each arm is notched so the edging (D) on the table top can fit into it. (See Detail in Exploded View.) Locate the 1"-deep notches 20½" in from the end of the support arms, see Fig. 14. To cut the notch, use the same method as on the aprons (refer to Fig. 4), but leave the bottom flat.

TAPER SUPPORT ARMS. After cutting the notch, taper the top of each support arm at the end closest to the notch, see Fig. 14. The taper starts 1½" in front of the notch and tapers to the end so it's 1⁹⁄₁₆" wide, see Fig. 15. Shop Note: I used the taper jig featured in *Woodsmith* No. 61.

SOFTEN THE END. Next, file the bottom corner of each arm to a ¾" radius, see Fig. 14. Then finish the supports by routing a ⅛" roundover on both bottom edges.

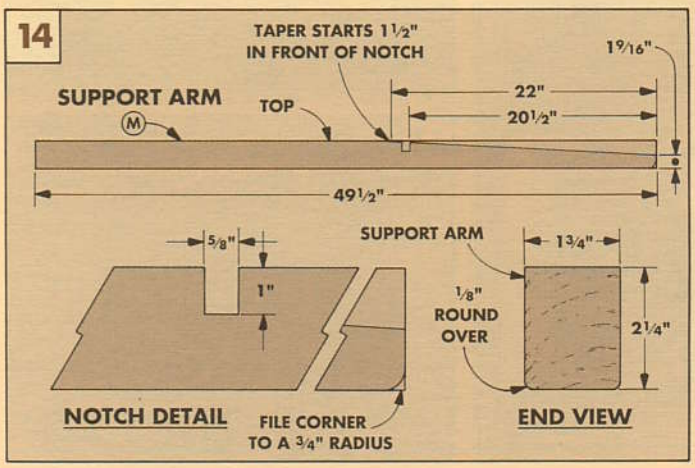

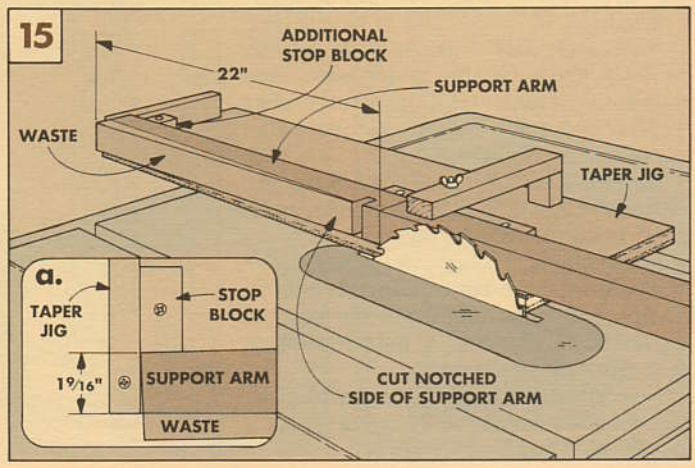

ATTACHING THE LEAVES

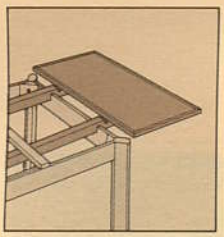

Once the tapers have been cut on the four support arms (M), screw holes are drilled on the bottom side of each arm so the support arm can be screwed to the leaves.

DRILLING THE ARMS. Begin by locating the shank holes on the bottom side of the support arms (M). These three holes are spaced 8½" apart, with the first hole located 2½" in from the narrow end, see Fig. 16.

With the hole locations marked, place the tapered side of the support arm face down on the drill press table. Now, at the marked locations, drill 3/16" shank holes centered on the thickness of each arm, see Fig. 16.

COUNTERBORING. Once the shank holes are drilled, each hole is counterbored with a 3/8" bit so the screws can reach up into the leaf. But since the support arm is tapered, the counterbores are at different depths.

To get the correct counterbore depth, set the depth stop on the drill press so the bottom of the bit stops 1" from the table. Now, with the *tapered face* of the arm still against the table, counterbore the holes, see Fig. 16.

POSITION THE LEAVES. After the holes are counterbored, the leaves are positioned on the support arms. Begin by putting the arms in place in the table, so that the inside of the notches in the arms are flush with the outside edge of the apron, see Fig. 17a.

Now place a leaf (B) on top of the arms so the inside edge of the leaf is flush with the outside edge of the notches, see Fig. 17a.

ATTACH THE LEAVES. Now, adjust the leaf so it's centered on the support arms. Using No. 8 x 1½" woodscrews, attach the leaf to the support arm at the deepest counterbores *only*. This allows for adjusting the arm.

With the leaf in place, slide it all the way into the table. Now, adjust the tapered end of the arm so it's centered in the apron notch, see Fig. 17b. With the arm centered, reach under the table and screw in the rest of the screws through the arms and into the leaves.

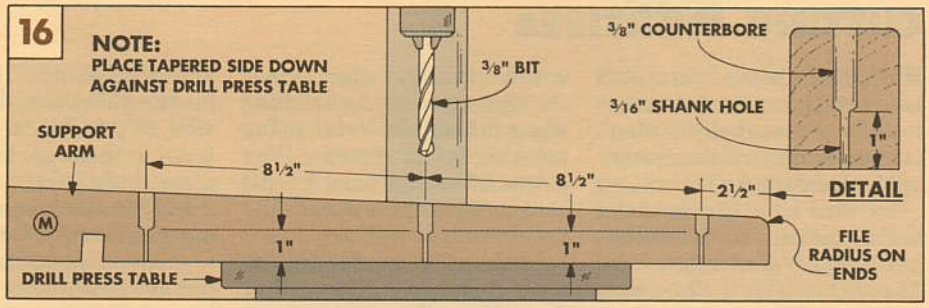

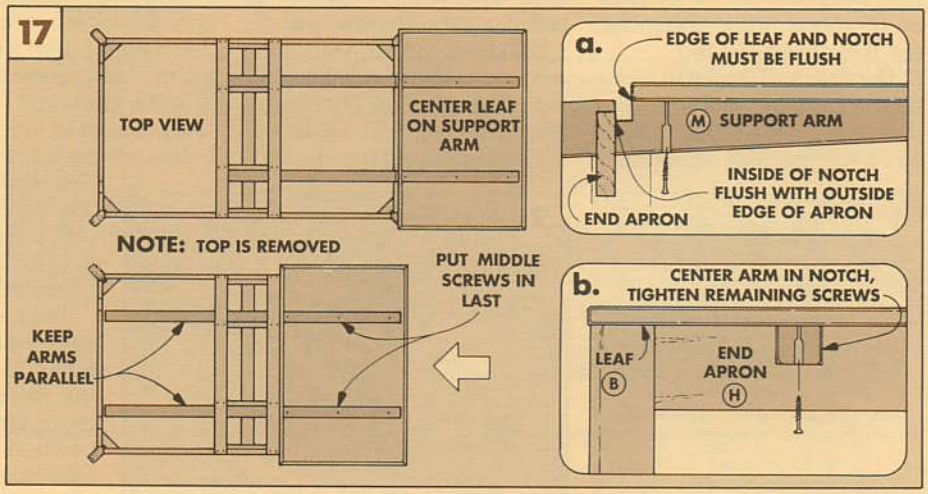

TOP GUIDES

Now that the leaves have been attached to the support arms, the last step on the table is to attach the two **guides (O)** to the bottom of the table top (A). These guides are what keep the table top from moving around.

CUT TO SIZE. Beginning with ¾"-thick stock, cut two pieces 2½" wide by 6⅝" long. With the guides (O) cut to length and width, cut a 45° tapered notch off each end. The taper is cut so there's a 2"-long flat left on the bottom of the guide, see Fig. 20.

After the guides are cut out, rout a ⅛" roundover on the bottom and end edges.

POSITION OF THE GUIDES. With the guides completed, I located their position on the bottom side of the table top (A).

First, locate the guides so they're centered on the length of the table, see Fig. 18.

Then, measuring from the inside of the side top edging (C), mark lines 3⅞" in from either side, see Fig. 19.

TEST THE LOCATION. Since the guides *must* fit between the top braces (J), I tested their location before I glued them in place by placing a piece of double-sided carpet tape on the guides and checking the fit.

Except for applying the finish, the table is complete. The table leaves should slide out easily when the table top is lifted.

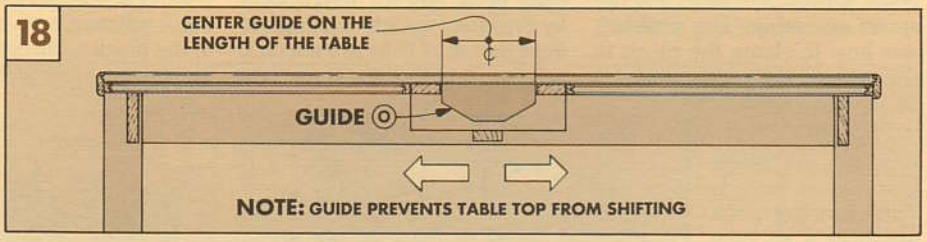

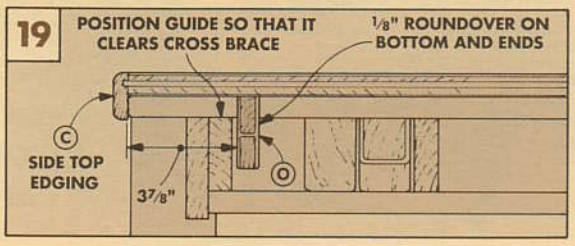

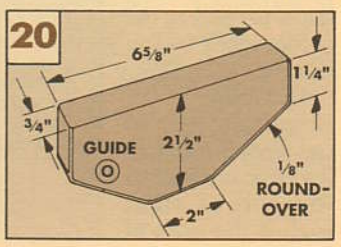

Shop Notes

CUTTING MORTISES

■ What's the best way to make a mortise? The method we use is to drill a series of holes to rough out the mortise, and then square up the ends with a chisel.

So, what bit is best to use to drill the holes? Our favorite bits are made by Vermont American. They're available in three sizes and reasonably priced, see page 24. (For more on mortising bits, see *Woodsmith* No. 26.)

The design of this bit makes it ideal for drilling mortises on a drill press. Like a Forstner bit, it has a scoring edge on the very outside rim. This edge lessens the chance of the bit wandering when drilling the overlapping holes needed for a mortise. With a twist bit or brad-point bit, the centerpoint tends to wander into a previous hole.

Unlike a Forstner bit, the Vermont American bit has a long flute. This allows chips to be pulled out of a deep mortise.

DRILLING SPEED. One thing you have to watch with these bits is the drilling speed. The instructions that come with the bit say the best operating speed is 1100 RPM for hardwoods. I think that's too fast. I like to run these bits as slow as possible to keep from burning them up. On my drill press, that's 380 RPM.

FENCE. Before drilling, I mount a fence to the drill press to guide the holes for the mortise in a straight line. However, when drilling the mortises in the curved back leg of the Chair (in this issue), I used a dowel stop pin so I could follow the curve.

DRILL MORTISES. To drill out a mortise, start by drilling the end holes to define the total length of the mortise, see Step 1 in Fig. 1. Then drill a series of holes next to one another, see Step 2.

There will be some small "ridges" along the sides of the mortise. To remove these ridges, position the bit on each ridge and cut it off, see Step 3.

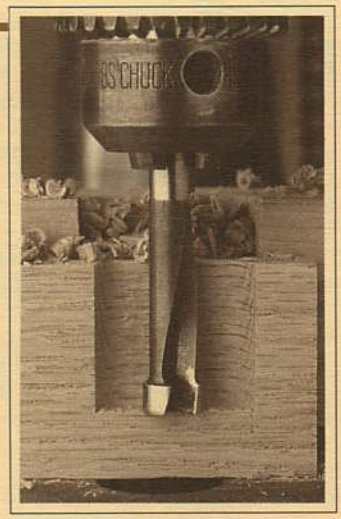

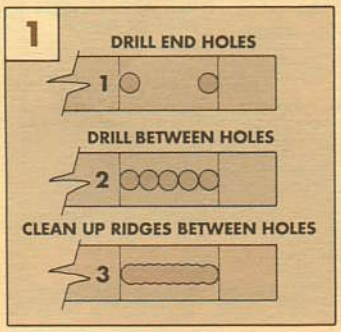

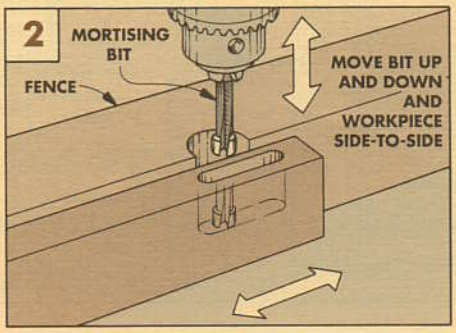

Then, come back and clean up any remaining ridges by moving the bit up and down while sliding the piece side-to-side, see Fig. 2.

SQUARE ENDS. Since the ends of the mortise are rounded, you have two options: You can square up the ends with a chisel. Or, you can round over the edges of the tenon with a file or chisel. I think it's easier to get an accurate fit by squaring up the ends of the mortise.

CLAMPING BLOCK

■ When I was building the Table shown in this issue, I used corner blocks to join the corners of the aprons and the legs to the apron assembly. The problem was how to clamp the block to the aprons to get pressure where it's needed.

The solution is to use a clamping block, see Fig. 1. This clamping block provides a surface that's parallel to the corner block so you can use a C-clamp.

The shape of the clamping block also transfers the clamping force so it pushes the aprons tight against the ends of corner block, see Fig. 2a.

CUT OUT BLOCK. All you need to make the block is a scrap piece of 2x4 about 6" long. Begin by drawing two intersecting 45° lines that start 1" from each end, see Step 1 in Fig. 1. (These two lines will form a right angle.) Then I cut along these lines using a band saw.

After the notch has been cut out, I relieved the inside corner of the block to direct the clamping pressure directly over the splines, see Step 2. The relief also prevents the block from putting any pressure on the very end of the aprons.

After the block is cut to shape, use it to clamp the corner block to the aprons, see Fig. 2.

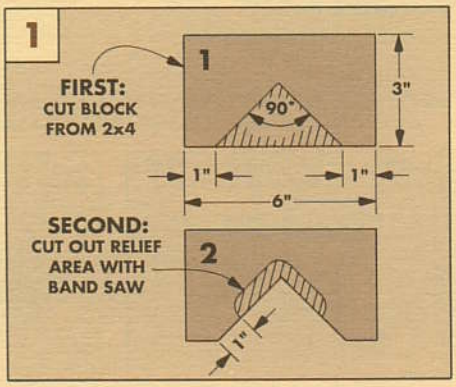

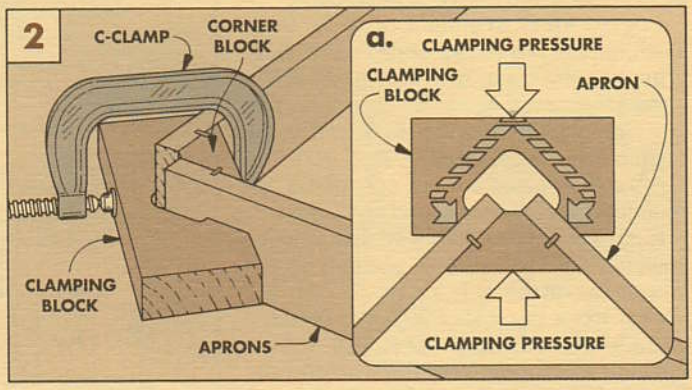

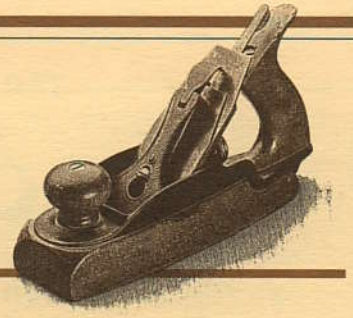

HANGER BOLTS

■ The Table on page 4 uses virtually no hardware. In fact the only metal pieces in the table, are a few woodscrews and four hanger bolts. While there's nothing special about woodscrews, hanger bolts are not something I use every day.

A hanger bolt has threads like a lag screw on one end and machine threads on the other end, see Fig. 1. Hanger bolts come in a variety of sizes, and I used one of the largest (3/8"-16 x 5"). (For sources, see page 24.)

You could use a lag screw to attach the leg to the corner block on the Table, but I used a hanger bolt for two reasons.

First, the machine thread end of the bolt allows you to remove the nut, and then remove the leg. That's handy if you're moving or you have to replace the leg.

The other benefit to hanger bolts is that if the leg becomes loose you can tighten up the nut.

The first time I saw this type of bolt, I saw how it worked, but wondered how do I screw it in? The way I do it is to double nut the threaded end. Start by turning two nuts onto the bolt until the top nut is flush with the end.

After the nuts are tight against each other, place a socket wrench over the top nut only and tighten the hanger bolt into the leg, see Fig. 2.

Then remove the nuts and fit the hanger bolt through the corner block on the table and tighten a washer and nut up tight against the block, see Fig. 3.

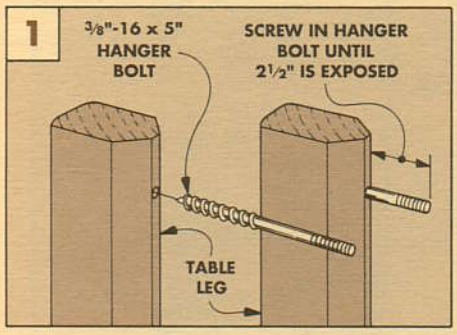

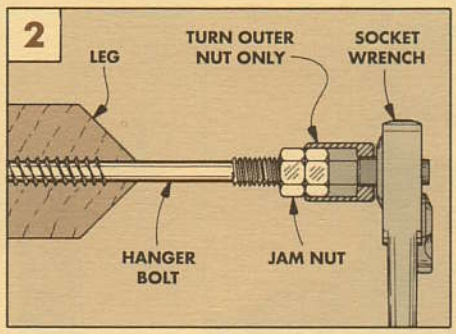

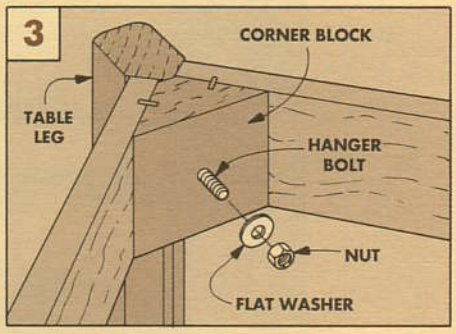

TAPE CLAMPS

■ I was getting ready to glue the wood edging on the ends of the Table (page 4) when I realized that I only had one clamp long enough to reach the full length of the table.

Since the edging doesn't require a lot of pressure I was able to get by using one long clamp, two short clamps and some packing tape.

FIT EDGING. I found it best to miter and glue one piece of edging at a time. Start by mitering a piece so the miters align with the ends of the plywood top.

CLAMPING. Once the edging fits, remove it and apply glue to the inside face. Then clamp it in place using a long clamp about 2" from the end, see Fig. 1. Use a clamping pad to protect the tongue on the other end, see Fig. 1a. Then place a second clamp about 4" from the first.

Shop Note: If you don't have long enough clamps (I only had one) you can overlap the jaws of two short clamps as shown in Fig. 1. I wrap the jaws with tape to keep them from coming apart.

TAPE EDGING DOWN. When both clamps are in place, reach for a roll of tape. The tape I use is called filament packaging tape. (It has fiberglass strands in it.) This tape is very strong and doesn't stretch.

First, wrap a 6" piece of tape tightly from the top of the table around the edging, see Fig. 1.

Now, move the second clamp 4" farther away, tighten it, and apply another piece of tape, see Fig. 2. Continue moving the clamp and taping until you reach the end of the piece.

When the glue is dry, remove the clamps and tape, then apply the next piece of edging using the same procedure.

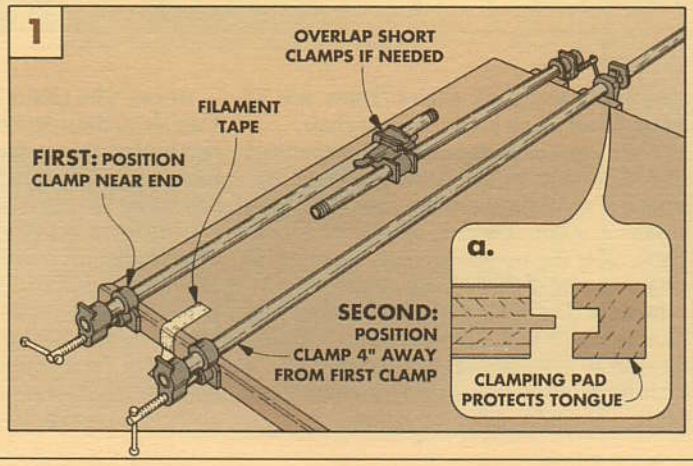

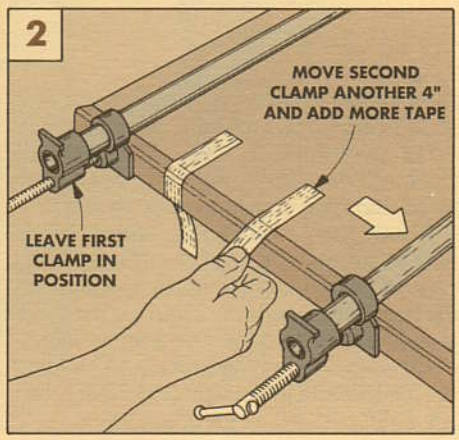

Ladder-Back Chair

Chairs aren't as difficult to build as you might think. The trick is to use a template to cut the curved back legs and slats on the band saw and router table. Then the legs are joined with mortise and tenon joinery.

Building chairs: just the thought of it brings out a certain uneasiness in many woodworkers. Okay, I'll admit this chair isn't the easiest project we've ever featured. But it isn't the most difficult either.

At first, the curved back leg and back slats may seem intimidating. But they're fairly easy to cut by using a template to rough out the shape on a band saw. Then use the same template to smooth them on a router table.

JOINERY. I found the process of building the chairs to be more time-consuming than it was difficult. It took me about 100 hours to complete a set of six chairs. There are 22 mortise and tenon joints on each chair.

It may appear as though you have to cut angled tenons on the back slats, see Exploded View. That's not the case. All of the tenons are cut straight, on square stock. Then, after the tenons are cut, the stock is cut on a curve with the band saw.

DESIGN. The thing I like most about this chair is sitting in it. The curved back allows the slats to fit the shape of my body. And it's a comfortable angle — straight enough for eating, yet comfortable for sitting.

WOOD. The chairs have a contemporary, Danish modern design. Using oak enhances the contemporary feel. However, by using mahogany or walnut, the chairs would take on a more formal, traditional appearance.

UPHOLSTERY. Woodworking is not the only challenge when building a chair, you also have to upholster the seat. On page 19 we show how to upholster the seat (without bunching at the corners).

FINISH. To provide a durable finish, I applied two coats of satin polyurethane to each chair, sanding lightly between coats.

EXPLODED VIEW

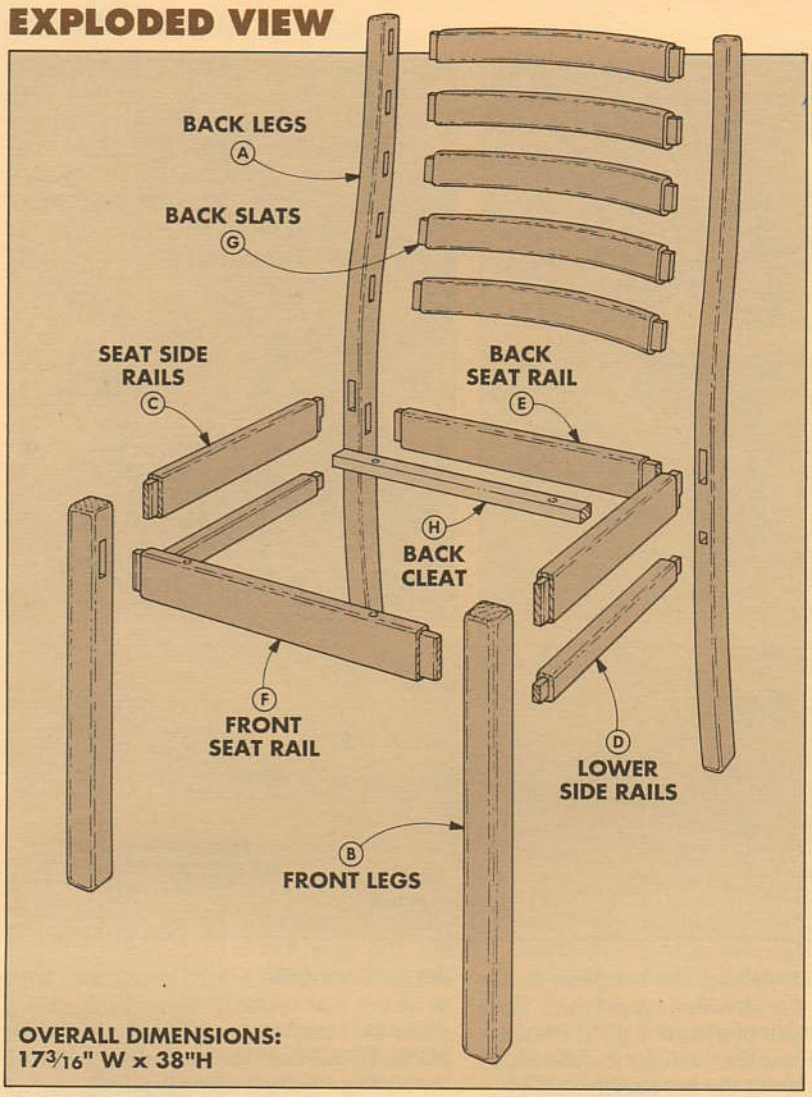

LEG TEMPLATE

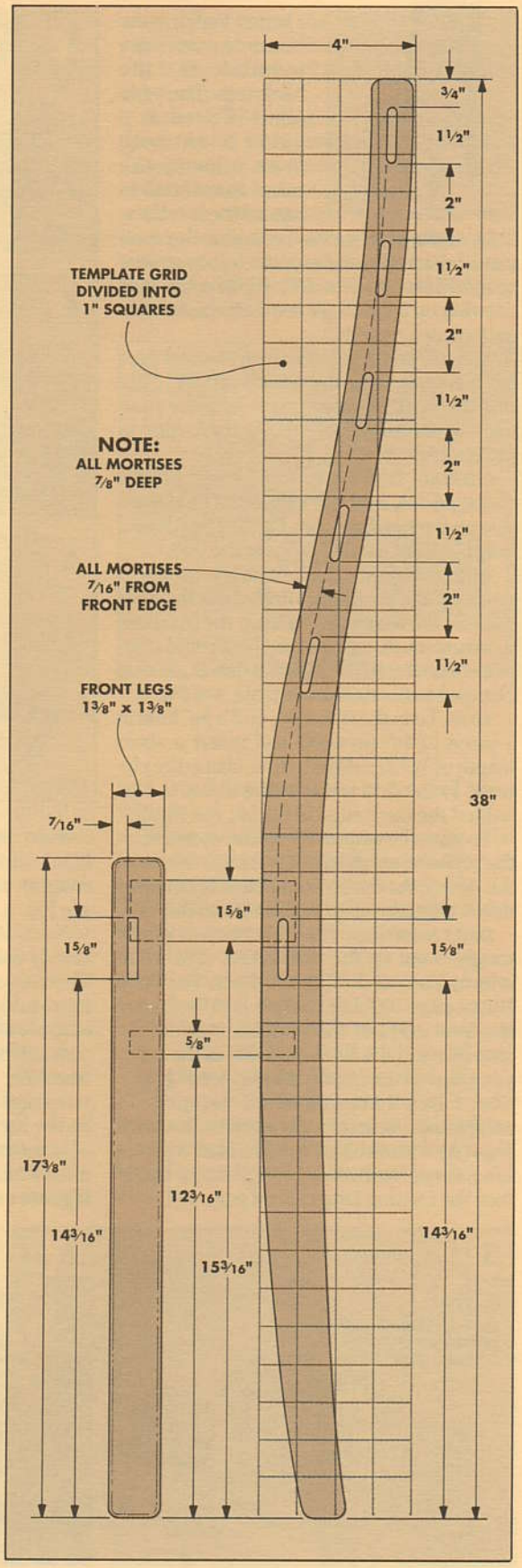

MATERIALS LIST

A	Back Legs (2)	1 1/16 x 4 - 39 rgh.
B	Front Legs (2)	1 3/8 x 1 3/8 - 17 3/8
C	Seat Side Rails (2)	5/8 x 2 - 14 1/2
D	Lower Side Rails (2)	5/8 x 1 - 14 1/2
E	Back Seat Rail (1)	5/8 x 2 - 16 1/2
F	Front Seat Rail (1)	5/8 x 2 - 15 15/16
G	Back Slats (5)	1 1/2 x 1 3/4 - 16 1/2
H	Back Cleat (1)	3/4 x 3/4 - 15
I	Seat (1)	3/4 ply - 15 1/4 x 15 1/4

SUPPLIES

LUMBER FOR ONE CHAIR

- 2.1 Board ft. 1 1/16"-thick oak
- 3.8 Board ft. 1 3/4"-thick oak
- 0.5 Board ft. 3/4"-thick oak
- 24" x 24" piece 3/4" plywood

UPHOLSTERY

- 18" x 18" piece 2" foam
- 24" x 24" piece fabric

CUTTING DIAGRAM

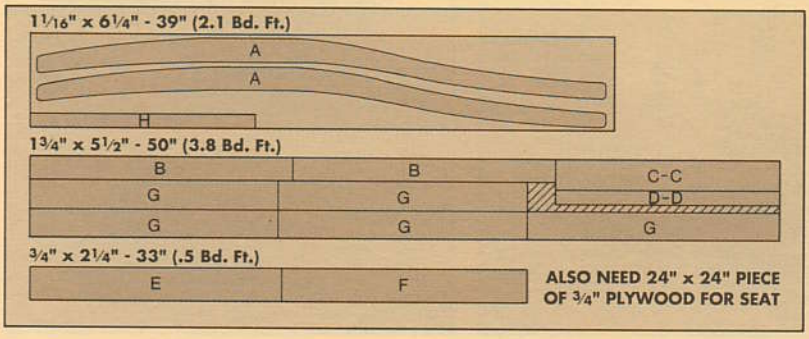

BACK LEGS

I began building the chairs by making a template for the back leg. The template is used as a guide to cut both back legs to the same shape, and to lay out the mortises.

LAY OUT TEMPLATE. To make the template, lay out the shape of the leg on a piece of 1/4" Masonite 4" x 38". (Follow the grid drawing on page 13, or send for the full-size pattern, see page 24.)

Also lay out the locations of the mortises for the back slats and back seat rail. Note that the start and stop points of these mortises are drawn square to the back edge of the template, see Fig. 1.

CUTTING TEMPLATE. After the mortises are layed out, I cut the template a little oversize on the bandsaw, see Fig. 2. Then I carefully filed and sanded down to the line.

MORTISES. Since the template is used as a guide for the mortises, I drilled out the mortises on the template. To keep the mortises a consistent distance from the curved front edge of the template, I used a dowel pin stop clamped to the drill press table, see Fig. 3.

STOP. To make this stop, drill a 3/8" hole in a piece of 3/4" plywood and insert a short length of 3/8"-dia. dowel. Now, clamp the plywood to the drill press so the dowel is 7/16" behind the back edge of the bit, see Fig. 3.

To align the stop, mark a reference line on the plywood straight out from the center of the dowel. As the plywood base is clamped down, align the center of the bit on this line.

DRILL MORTISES. Now the mortises can be roughed out on the drill press. (For more information on drilling mortises, see Shop Notes, page 10.) As each hole is drilled, keep the front edge of the template against the stop pin, and the back edge 90° to the reference line on the plywood base, see Fig. 3.

CUT OUT LEG. When the template is completed, you can begin work on the **back legs (A)**. I was able to get two back legs out of one 1 1/16" blank that measured 6 1/4" by 39" (see the Cutting Diagram on page 13).

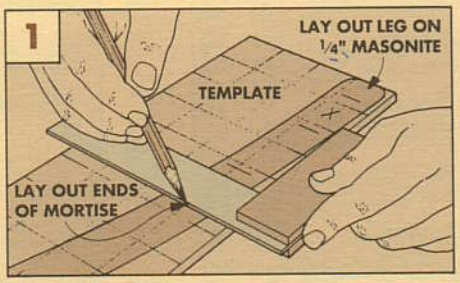

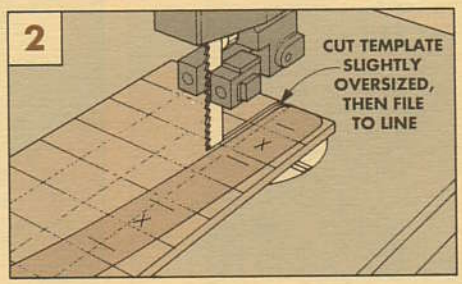

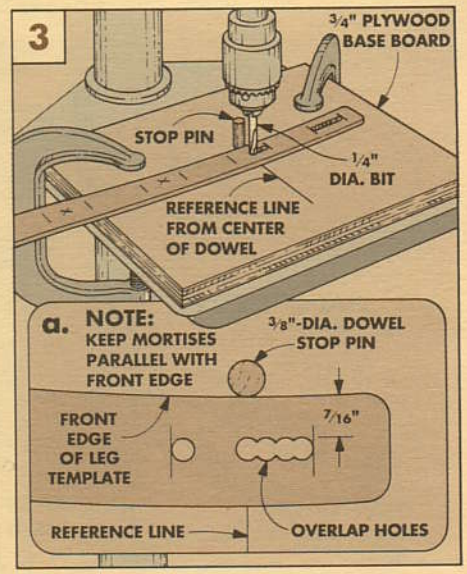

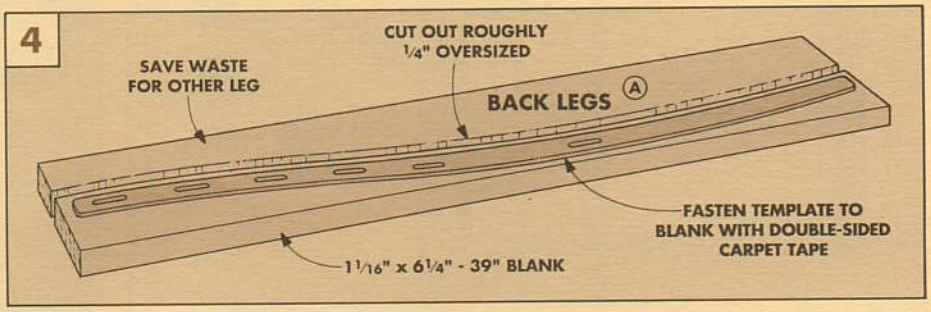

Start by fastening the template to the blank with double-sided carpet tape. Then roughly cut out one leg about 1/4" oversize, see Fig. 4. (Save the waste for the other leg.)

Next, I cut out the leg exactly 1/16" oversize by using a guide block on the band saw. Then it's cut to final size with a flush trim bit on a router table. (For a detailed explanation of these steps, see the article on page 18.)

MARK MORTISES. Before removing the template, draw through the mortises in the template to mark the location of the mortises on the leg, see Fig. 5.

MIRRORED SET. To make one chair, you need a mirrored set of back legs. Since both legs are exactly the same shape, you can use the same template — but the mortises have to be cut into opposite faces. To do this, I stuck the template on the *back* side of the blank. Then cut out the second leg following the same procedure as the first leg.

MORTISES. After both legs are cut out and the mortises outlined, you can drill them out using the same stop jig and procedure used on the template. The only difference is these mortises are 7/8" deep, see Fig. 6.

These mortises will be slightly curved because they follow the curve of the leg (sort of a cooked hot dog shape). To get the tenon to fit, use a chisel to square the front edge of the mortise to a straight line, see Fig. 7. Also square up the ends of the mortise.

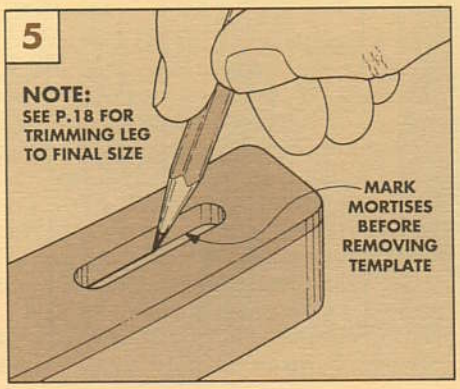

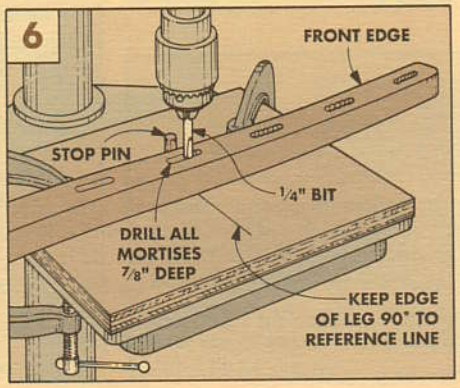

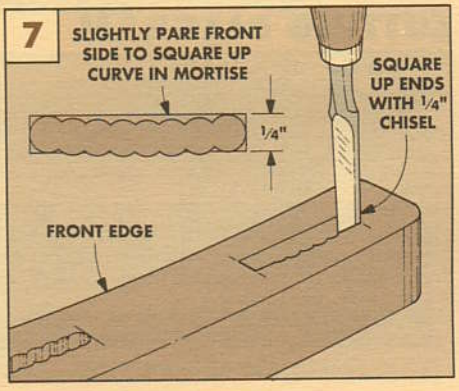

BACK LEGS CONTINUED

After drilling out five mortises for the slats and one for the back rail, you can begin laying out the mortises on the *front* edge of each back leg. These mortises will hold the side seat rail (C) and lower side rail (D).

MORTISE LAYOUT. The trick is to lay out the mortises so they will be at the exact same location on both legs. Begin by laying one leg down on its side at the end of a bench. Then lay down a framing square so one arm of the square is flush with the end of the bench and the other arm rests against the flat section on the front of the leg, see Fig. 8.

Now measure up 12 3/16" and 15 3/16" from the end of the framing square to mark the bottom of the mortises. The lower mortise is 5/8" long and the upper one 1 5/8" long.

DRILL OUT MORTISES. To drill out these mortises, start by clamping a straight piece of 2x4 to the drill press table as a fence, see Fig. 9. Position the fence so the 1/4" bit is centered on the thickness of the leg.

Since the back of the leg is curved, there isn't a long enough flat spot on it to allow the leg to sit down flat on the drill press table. I solved this problem by putting a 5"-long scrap block under the mortise locations to raise the leg up off the drill press table, see Fig. 9. (Stick the block to the leg with double-sided carpet tape.)

Now, drill 7/8"-deep mortises, moving the spacer block along with the leg as you drill. Complete the mortises by squaring up the ends with a chisel.

ROUND OVER EDGES. When all the mortises are cut in the back leg, the only step left is to round over the edges and ends. To do this, use a 1/4" round-over bit set 3/16" high in the router table, see Fig. 10.

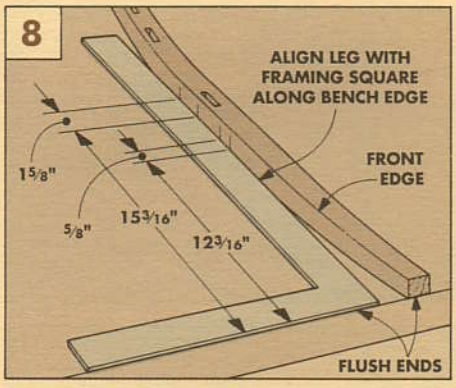

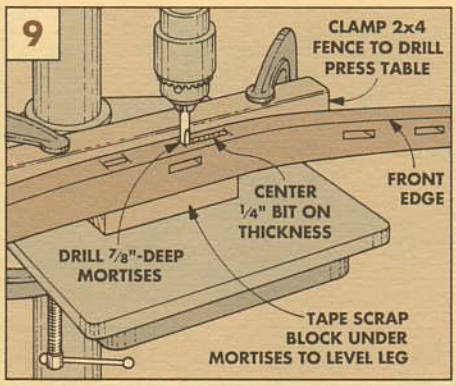

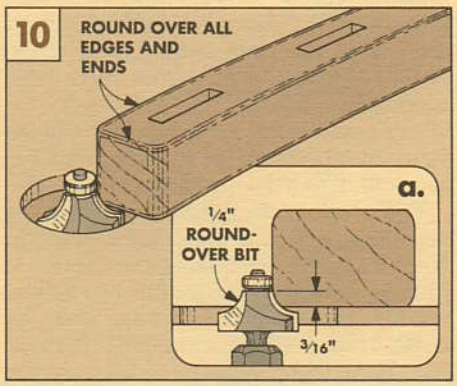

FRONT LEGS

At this point, the back legs (A) are complete. Now you can begin work on the **front legs (B)**. It's critical that the mortises in the front legs align with those in the back legs.

CUTTING THE PIECES. Start making the front legs by cutting out two blocks 1 3/8" square by 17 3/8" long.

MORTISE LAYOUT. Once the blocks are cut to size, lay out two 1/4"-wide mortises on the back face of each leg to join to the side rails (C, D), see Fig. 11. These mortises are located the same distances (12 3/16" and 15 3/16") from the bottom end of the front leg (B) as the two mortises on the back leg (A).

Note that the mortises are *not* centered on the thickness, but 7/16" from the *outside* edge of each leg. (Here's where you have to start thinking of the two front legs as a mirrored set.)

After the mortises are layed out on the back face of each leg, lay out a 1 5/8"-long mortise on the *inside* face of each leg to join to the front seat rail (F), see Fig. 11. Locate these mortises 14 3/16" up from the bottom end of the legs, 7/16" from the outside edge. And be sure they face each other. (Again, so you end up with a mirrored set of legs.)

CUT MORTISES. Now you can drill out all the 7/8"-deep mortises on the drill press. (As before, to help position the mortise in relation to the edge of the leg, clamp a straight 2x4 as a fence to the top of the drill press table.)

When you drill out the mortises on adjacent sides, the bottoms will break through very slightly into each other, see Fig. 11. That's okay, the tenons will be cut back later where they meet.

ROUND OVER EDGES. After squaring up the mortises with a chisel, I rounded over the edges and ends of the front legs on the router table. First, round over the two edges nearest the mortises with a 1/4" round-over bit set 3/16" high, see Steps 1 and 2 in Fig. 12.

Then raise the bit to rout a full 1/4" round-over on the inside edge (Step 3) and both top and bottom ends. Finally, switch to a 1/2" round-over bit and rout the outside edge, see Step 4.

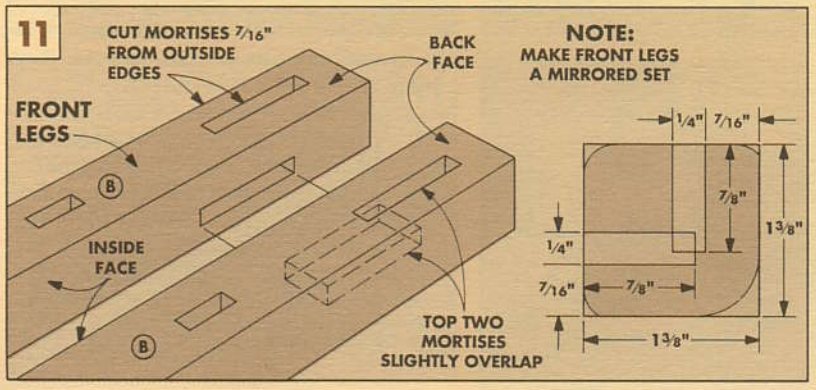

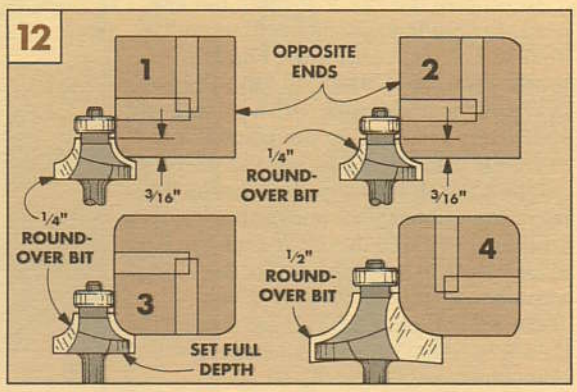

BACK SLATS

After the legs are complete you can begin working on the **back slats (G)**. Each slat is cut to the curved shape from a 1¾"-thick block.

CUT TO SIZE. Start by cutting five blocks of 1¾"-thick stock to a width of 1½" and length of 16½", see Fig. 13.

CUT TENONS. It's easiest to cut the ¾"-long offset tenons on the ends of the back slats *before* cutting the slats to shape. To do this, first raise a 13/16" dado blade ⅛" high and cut rabbets on the ends of the block. (Shop Note: To cut a ¾"-long rabbet with a 13/16" dado blade, I "buried" the dado blade 1/16" into an auxiliary fence, see Fig. 14a). Cut the ⅛"-deep rabbets on the front face and top and bottom (but not the back) of the block.

To complete the offset tenon, I cut a deeper rabbet into the back face of the block. Since it's a heavy cut, make it in a series of passses sneaking up on the finished height, see Fig. 14. Check the fit of the tenon by trying it in one of the mortises cut in the back legs. If the tenon is too thick, increase the blade height slightly and make another pass.

MAKE A TEMPLATE. After all the tenons are cut to fit the mortises, you can cut the back slats to shape. I started by making a template out of ¼" Masonite, see Fig. 15. Cut the template 15" long and about 3" wide.

To get the curve, strike and cut a 36"-radius arc on the template. Shop Note: To strike the radius, I made a trammel point from a long strip of Masonite, see Fig. 15.

CUT ARC ON BLANK. After the arc on the template has been filed smooth, attach the template to the top of the slat blank with double-sided carpet tape. Be sure to face the arc on the template to the *front* of the blank. (That's the face nearest the ⅛" offset tenon.)

Now, cut out the curved front face of the slat 1/16" from the template on the band saw, see Fig. 16. (Use the same guide arm and technique used to cut out the back legs.) Then mark the front edge of the template on the blank and remove the template.

To remove the last 1/16" up to the line, I used a rasp and a drum sander to smooth the front face on all five slats, see Fig. 17.

CUT BACK FACE. Then, to form the back face, make a guide block with a pointed end and clamp the guide so the pointed end is 9/16" away from the blade, see Fig. 18. Next, cut the back slat to shape by running it between the pointed block and the blade. (This method keeps each slat a uniform 9/16" thick.) Now file (or plane) the back edge smooth so it ends up about ½" thick.

ROUND-OVER EDGES. The last step on the slats is to round over the four edges with a ¼" round-over bit, see Fig. 19.

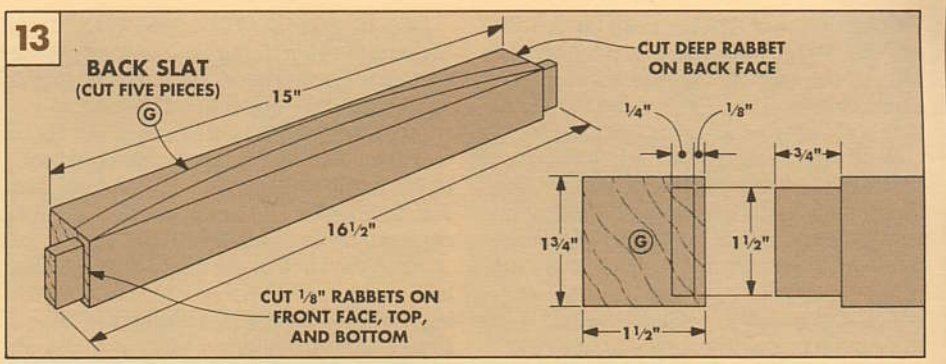

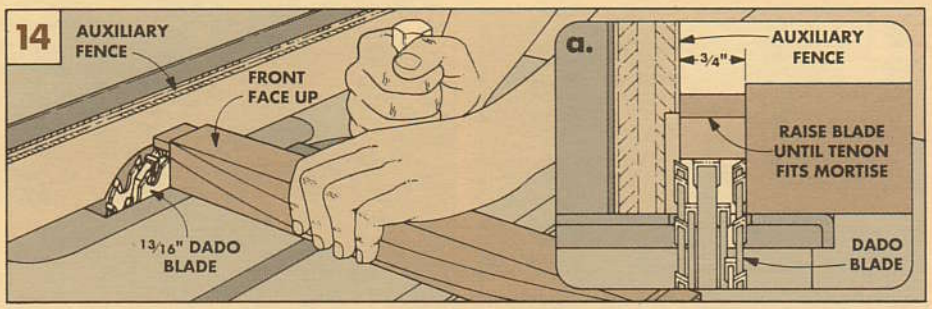

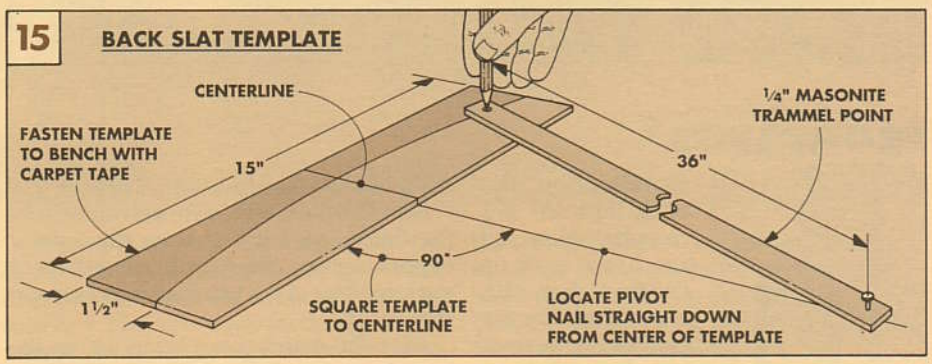

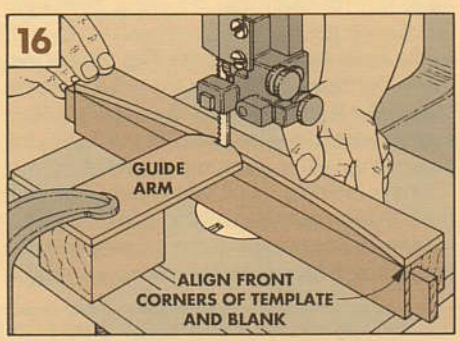

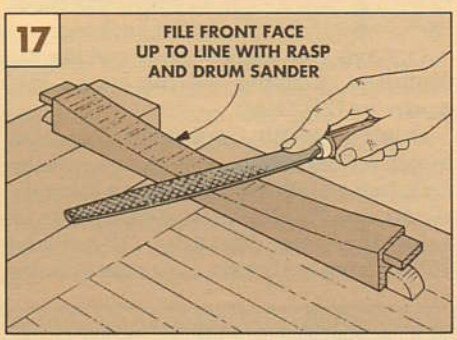

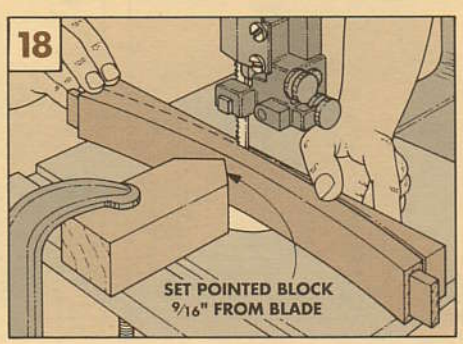

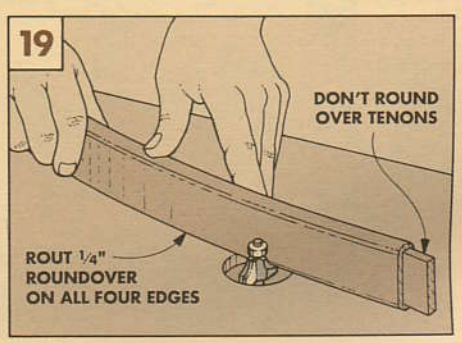

SEAT RAILS

Next, you can make the seat rails and side rails. I started by resawing enough wood for the four seat rails and two lower side rails to 5/8" thick.

CUT TO SIZE. Now, cut all of the seat rails 2" wide and the lower side rails 1" wide, see Fig. 20. As for length, the **seat side rails (C)** and the **lower side rails (D)** are both cut 14½".long.

The **back seat rail (E)** is cut the same length as the back slats (16½"). Since the front legs are thicker than the back legs, the **front seat rail (F)** is 9/16" shorter (15 15/16").

CUT TENONS. After all of the pieces are cut to length, next cut ¾"-long tenons centered on the ends of all the rails, see Fig. 20a. Cut the tenons to thickness and width to fit the mortises in the legs (1⅝"-wide tenons on the seat rails and ⅝"-wide tenons on the lower side rails).

ROUND OVER EDGES. Next, round over all four edges of each rail (but not the tenons) with a ¼" round-over bit on the router table, refer to Fig. 19.

NOTCH AND CHAMFER TENONS. There are a couple more things that have to be done before assembly. When the rails are mounted into the legs, the tenons of the seat side rails (C) will run into the back and front seat rails (E,F), see Fig. 21.

To solve this problem at the back leg, I notched the bottom of the tenons on the seat side rails. Since the overlap at the front is very slight, you only need to chamfer the tenons of the side and front seat rails.

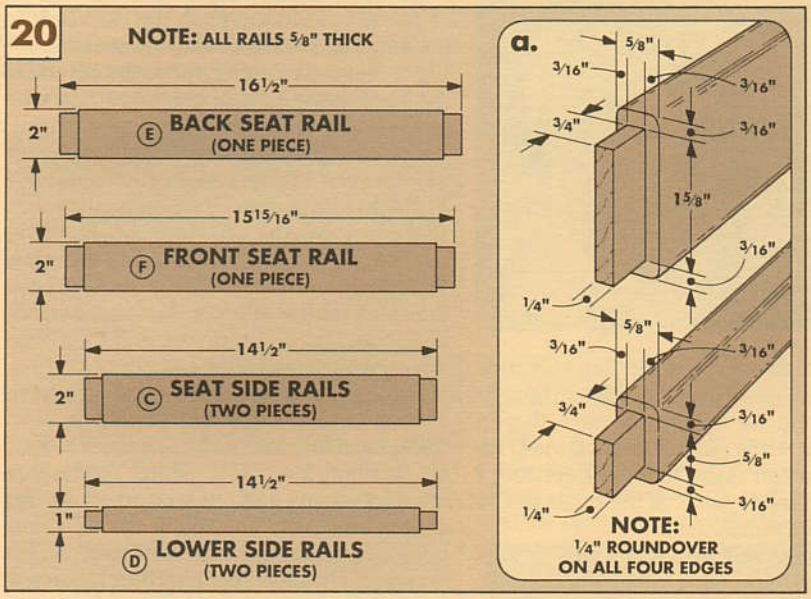

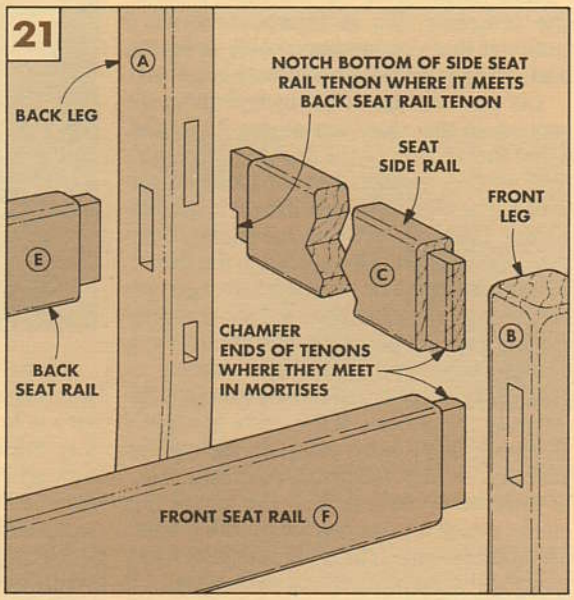

ASSEMBLY AND SEAT

I started assembling the chair by gluing and clamping each side independently. Connect the front and back legs with the side rails checking that the assembly is square.

After the side units are dry, glue the front and back rails and the back slats between the side units to complete the chair. (Shop Note: I assembled the chair on top of my table saw since it's the flattest surface in my shop.)

CLEAT. The plywood seat is mounted to a **back cleat (H)** that's glued to the front face of the back seat rail (E), see Fig. 23. To attach the seat, drill screw holes through the back cleat and the front seat rail (F).

SEAT. The last piece to make is the ¾" **plywood seat (I)**, see Fig. 22. It's cut to overhang ½" on the front, but leave ⅛" space between the sides and corners of the seat for the upholstery. (For more on the upholstery, see the article on page 19.)

Before upholstering the seat, rout a ¼" roundover on the top and bottom edges and ½" roundover under the front edge, see Fig. 24. Finally, after finishing the chair, screw the upholstered seat in place.

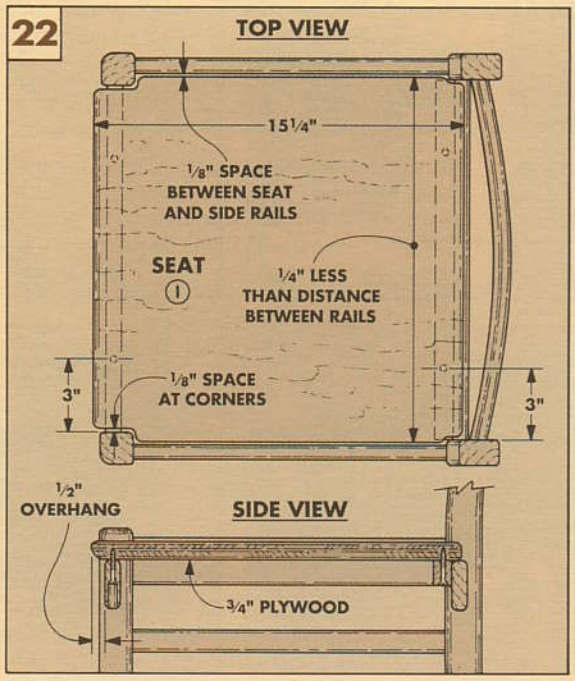

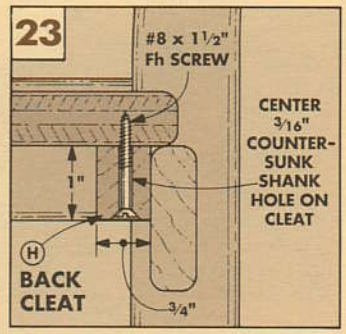

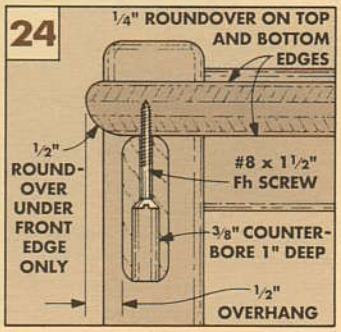

Using Templates

The trick to making uniform curved-back legs for the chairs (shown in this issue) is to use a template. The template makes cutting out the pieces a simple two-step operation on a band saw and router table — a process that produces all the pieces you want with the *exact* same shape.

TEMPLATE. I used ¼" Masonite to make the template. It's an inexpensive, hard material that doesn't have voids or knots, and you can easily work a smooth edge on it.

LAY OUT PATTERN. Start by laying out the pattern of the chair leg on the Masonite. (Use the project's grid drawing, see page 13.) Another method is to cut a full-size pattern out of paper and glue it right to the Masonite. Then cut out the shape slightly oversize, and carefully file right up to the line.

WORK CAREFULLY. Any notches or gouges on the edge of the template will show up later on the finished pieces, so it's important to take the time to work the edges smooth.

It's not critical your template is exactly the same as the pattern. If the curve is slightly different, that's okay. All *your* legs will be identical — they will match *your* template.

CUTTING TO SHAPE. After the template is made, attach it to the leg blank with double-sided carpet tape. Then, very roughly bandsaw the leg out of the blank so it's about ¼" larger than the template.

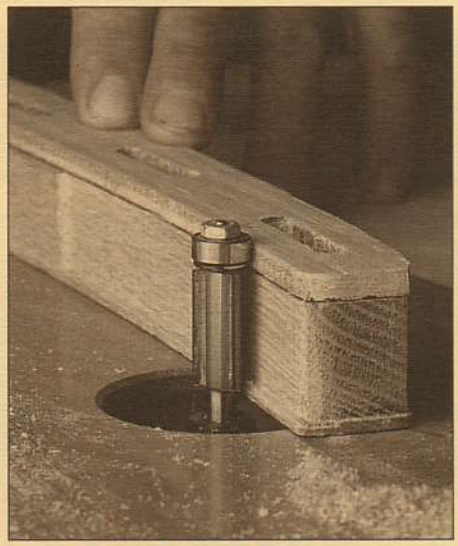

Next, cut the shape again, but this time carefully so it's 1/16" oversize. (Since the next step is to rout the leg to *exact* size, there's less chipout when only routing off 1/16".) Although you can make this cut freehand, I clamped a "guide arm" to the band saw to make a more precise cut.

The arm is made from a piece of ¼" Masonite glued to the top of a 1⅛"-thick block, see Fig. 1. The arm is mounted to the block so it's raised up high enough to rub against the *template*, not the rough edge of the workpiece. The trick to this arm is to round the end, and then cut a notch for your blade to fit in. (I cut a ⅜" notch for the ¼" band saw blade I used.) Now clamp the guide arm to the table so the blade is 1/16" from the outside edge of the curved end, see Fig. 1a.

To cut out the leg, push the leg blank so the template rubs against the guide arm, see Fig. 2. As you're cutting, move the tail end of the blank to the right or left to keep the template parallel to the blade.

ROUTING TO FINAL SHAPE. After the workpiece is cut oversize, you can rout off the last 1/16" with a flush trim bit on the router table. (For sources of flush trim bits, see page 24.)

With the template still taped to the top of the workpiece, raise the bit up until the bearing rides on the edge of the template, see Step 1 in Fig. 4. Then rout in a clockwise direction around the bit, see Fig. 3.

Since the flush trim bit I used only has a 1"-long cutting edge and the leg is 1 1/16" thick, I had to lower the bit to make a second cut, see Step 2 in Fig. 4. (Note: You have to use a ¼"-shank flush trim bit when routing a piece this thick. The shank of a ½"-shank bit would rub against the workpiece on the first cut.) The flush trim bit will cut the leg to the exact shape of the template.

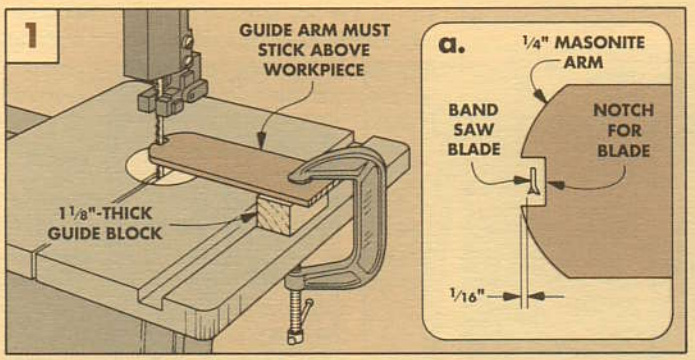

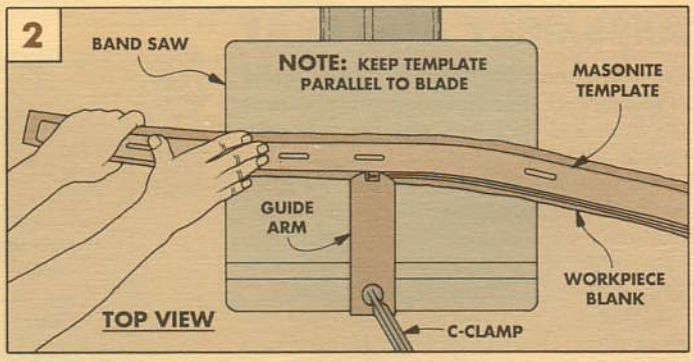

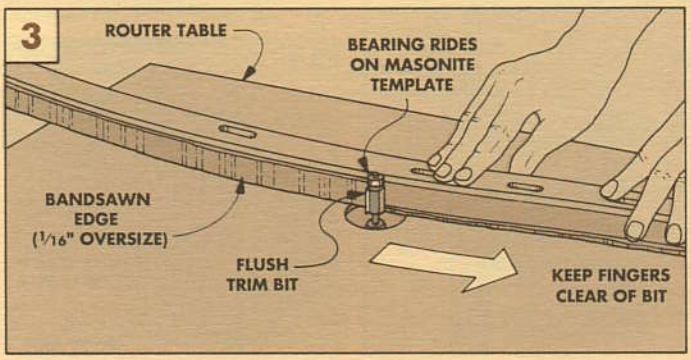

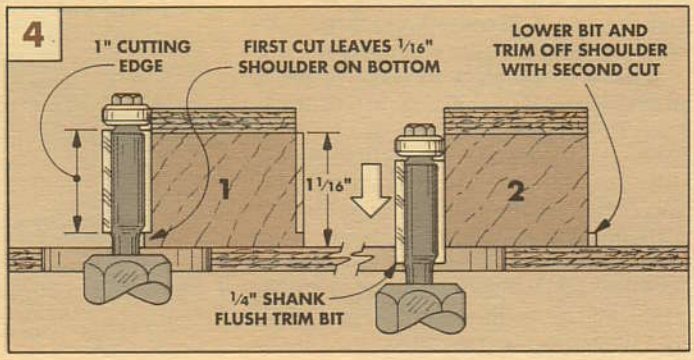

Upholstery

I know very little about fabric and foam. So when it came time to upholster the chairs, I went to a local upholstery supplier for information and materials. As usual, there was more to learn than I thought.

FOAM CUSHION. The foam we used on the chairs is not foam rubber. Foam rubber is latex rubber, which is made from the sap of the rubber tree. The foam I used on the chairs is polyurethane foam which is a synthetic product.

There are three different densities of polyurethane foam; low, medium, and high. The higher the density, the less likely you are to "bottom out" when you sit on it. High density foam also will not break down as fast as low density foam. I used high density foam to make the cushions for the chairs.

FABRIC. The fabric we used on the seats also has some special features. First, the back of the fabric has a surface coating on it. This surface coating keeps the weave of the fabric from being distorted when it's stretched tight.

Secondly, we wanted a fabric that would stand up well to everyday use but, would look appropriate in a dining room. The fabric we used is a nylon/polyester blend. The thread size is fairly large and the weave of the fabric is rather loose, which gives the seat a soft texture and allows the air to escape from the foam when you sit down.

To get professional quality results, I suggest you go to a upholstery shop or a fabric store and ask for materials that are intended specifically for upholstery.

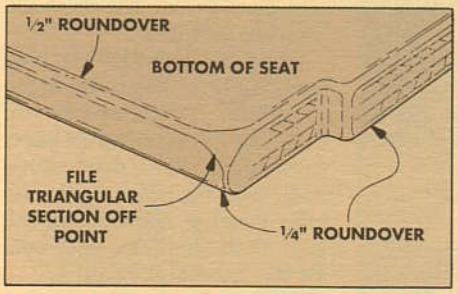

1 *Before upholstering plywood, round over all edges with 1/4" roundover and front bottom edge with 1/2" roundover. Then file point off bottom front corner.*

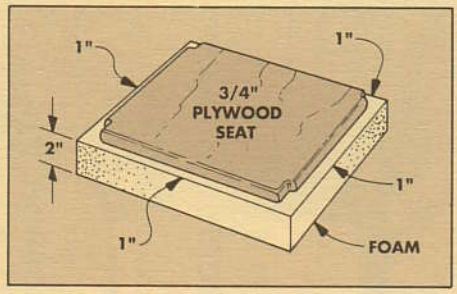

2 *Cut 2"-thick foam 2" wider and longer than plywood seat. This leaves a 1" overhang on each side. You can cut the foam easily on the band saw.*

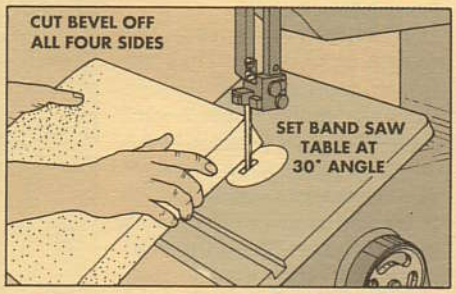

3 *Next, tilt the band saw table to 30° and bevel each edge of the foam. Start the bevel right on the extreme outside edge of the foam.*

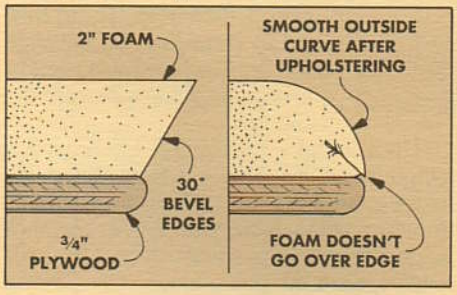

4 *Foam is placed on top of the seat with the bevel facing down. Undercutting the foam allows it to be pulled down to a smooth outside curve without bunching.*

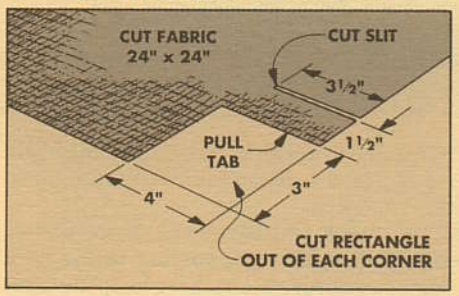

5 *Cut a piece of fabric to a 24" x 24" square. To keep the fabric from bunching in the corner cut a rectangle from each corner, then slit a pull tab.*

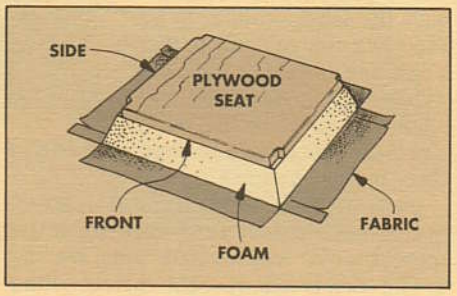

6 *Center the foam and the plywood on the back side of the fabric. Align sides of the plywood seat with the sides of the fabric that have the 3 1/2" slits.*

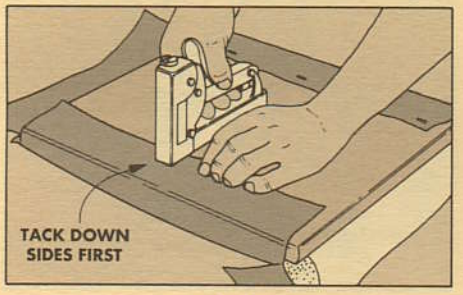

7 *Beginning with the sides, push down on the plywood and pull the fabric up and over the plywood. Use a staple gun to tack the fabric in place every 2" or 3".*

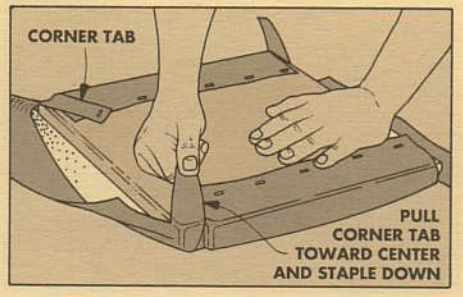

8 *Now pull the corner tabs in toward the center of the plywood. Lap the corner tabs over the stapled-down fabric, so the fold is in the notch. Staple tab down.*

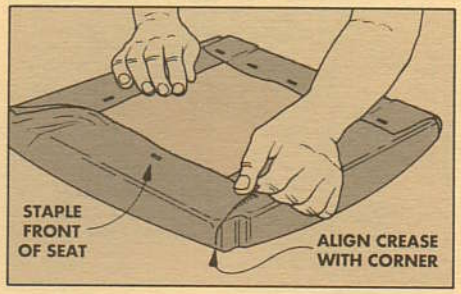

9 *With the tabs stapled down, stretch the remaining fabric around the front and back of the plywood. Staple down fabric to form a crease at the corner.*

Formal Dining Chair

After building the set of ladder-back chairs shown on page 12, I decided to modify the design and build another style with vertical slats. The basic construction of this chair is very similar, but changing the direction and size of the back slats gives the chair a more traditional or formal look — especially when it's built with a dark wood like the Honduras mahogany chair shown here.

CONSTRUCTION STEPS. The steps to building this chair are almost identical to the ladder-back chair, until it's time to work on the back slats. I started by following all of the same steps for making the legs as on the ladder-back chair (pages 14 to 15) with one exception. Since the slats are vertical rather than horizontal, you don't need four of the mortises (the middle four) on the back legs.

The top and bottom mortises, though, are still needed in exactly the same locations to hold the back top rail (G) and the back seat rail (E) in place. (These two pieces are made slightly different on the vertical slat chair. There's more explanation about these pieces on page 22.)

BACK SLATS. All six **back slats (H)** are cut out of one blank of 1 1/16"-thick stock that measures 6 1/4" wide by 20 3/4" long, see Step 1. The trick is following the correct cutting sequence to get all six slats out of the blank so each slat ends up the exact same thickness and shape.

USE BACK LEG TEMPLATE. Since the six slats follow the same contour as the back legs, you can use the back leg template to set up the first cut on the slat blank.

Attach the template along one edge of the blank with double-sided carpet tape so the top end of the template sticks out 1 7/8" beyond the end of the blank, see Step 1.

MAKE FIRST CUT. Next, I clamped the guide arm to the band saw to make the initial cut 1/16" away from the template, see Step 2. (This is the same guide arm used to cut out the back legs, see page 18.)

Once the oversize cut was made along the front edge of the template, I switched to the router table to clean up the band-sawn edge. This is done with a flush trim bit mounted so the pilot bearing rides along the edge of the template and routs the leg smooth, see Step 3.

CUT TO THICKNESS. Now that you have established the front contour of the first slat, the trick is cutting the back face to the same shape so the slat will be a uniform thickness. To do this, start by removing the template from the blank and also remove the original guide arm from the band saw.

Then make a new guide block with a pointed end, see Step 4. Clamp this guide block to the band saw table so it's 9/16" away from the blade. Now, you can cut the back edge of the slat by pushing the front (routed) edge against the guide block. The slat will

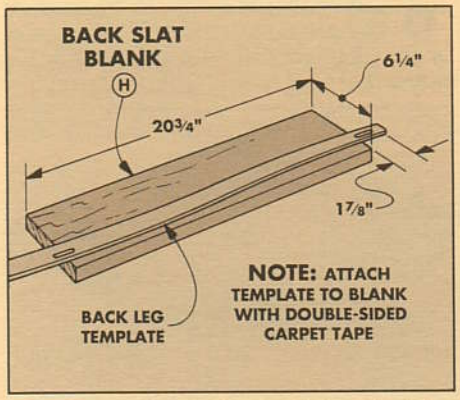

1 *To make the back slats, start by fastening the back leg template to a blank of 1 1/16"-thick stock with double-sided carpet tape.*

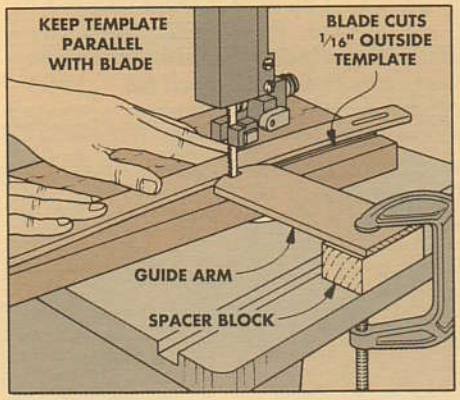

2 *Clamp a guide arm to the band saw with blade set back 1/16" inside a notch in end of guide arm. Then cut front edge of slat by rubbing template along arm.*

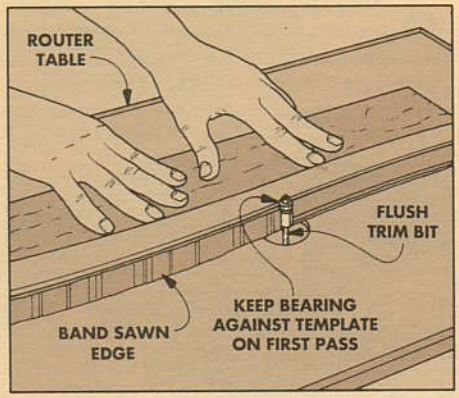

3 *To trim edge flush with template, use flush trim bit in router table and run bearing against template. Since stock is thick, lower bit and make second pass.*

end up a uniform 9/16" thickness, and the back face will follow the same contour as the front face.

REPEAT THE STEPS. To get another slat out of the blank, just repeat these steps. First, reattach the template so it's *inside* the cut edge of the blank and trim it flush on the router table (repeat Step 3).

Then remove the template and cut off another 9/16"-thick slat (Step 4). Continue this process until all six slats have been cut from the blank.

SMOOTH BACK FACE. At this point, the slats should be fairly uniform in thickness, but the back faces will be rough from the band saw cuts. I smoothed the back faces with a sanding drum on the drill press, see Step 5.

To do this, clamp the guide block (with the pointed end) to the drill press table 1/2" away from the outside of the sanding drum. Then feed the slats at a steady rate between the drum and the guide block.

The goal here is not only to remove the band saw marks, but to be sure the slats are sanded to a uniform 1/2" thick (especially at the ends). Later, the ends fit into 1/2" mortises. If the slats are too thick, they won't fit in, and if too thin, the fit will be sloppy.

ROUND OVER EDGES. After all the slats are sanded smooth, round over all four edges with a 1/4" round-over bit on the router table, see Step 6.

EXPLODED VIEW

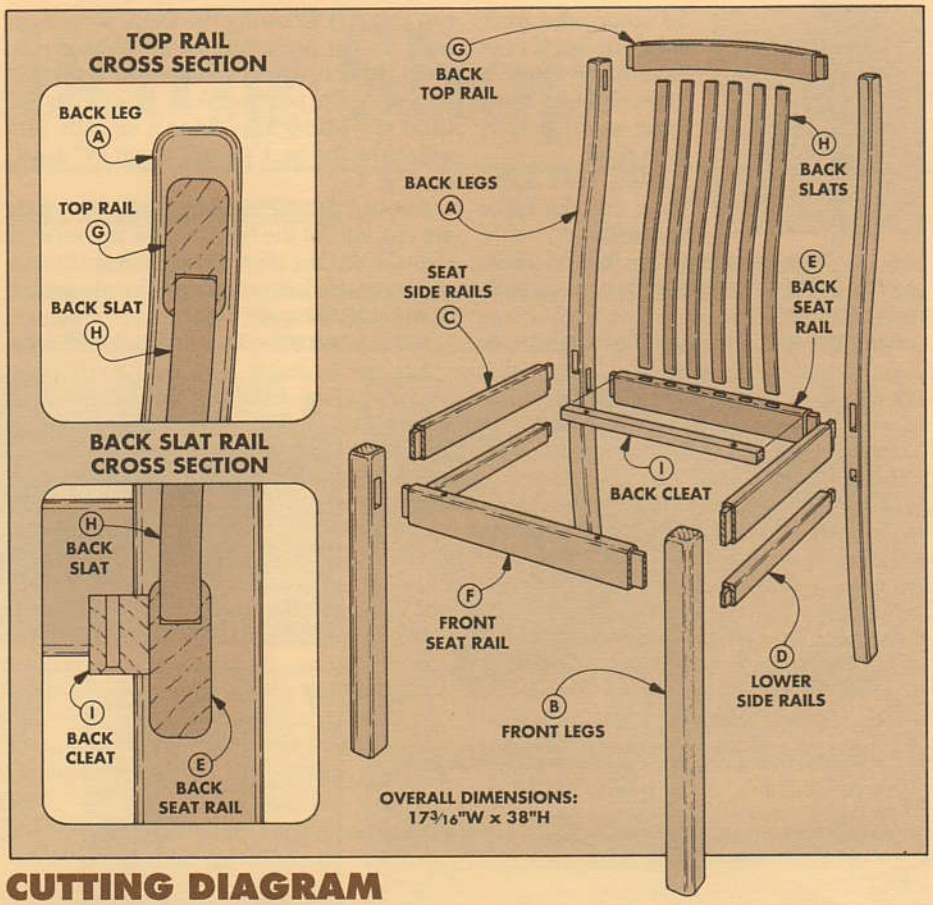

MATERIALS LIST

A	Back Legs (2)	1 1/16 x 4 - 39 rgh.
B	Front Legs (2)	1 3/8 x 1 3/8 - 17 3/8
C	Seat Side Rails (2)	5/8 x 2 - 14 1/2
D	Lower Side Rails (2)	5/8 x 1 - 14 1/2
E	Back Seat Rail (1)	3/4 x 2 - 16 1/2
F	Front Seat Rail (1)	5/8 x 2 - 15 15/16
G	Back Top Rail (1)	1 3/4 rgh. x 1 3/4 - 16 1/2
H	Back Slats (6)	1/2 x 1 1/16 - 20 3/4
I	Back Cleat (1)	3/4 x 1 - 15
J	Seat (1)	3/4 ply - 15 1/4 x 14 7/8

CUTTING DIAGRAM

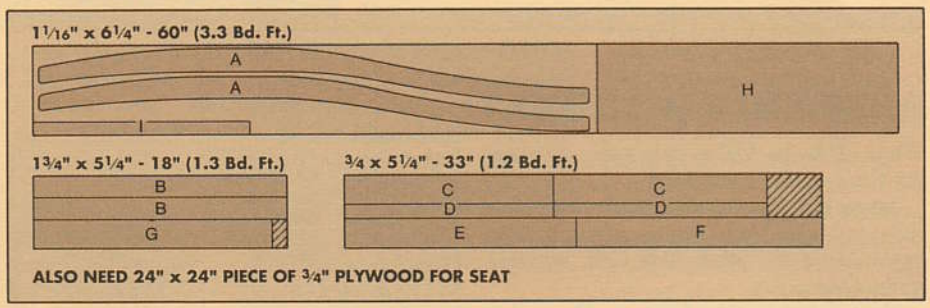

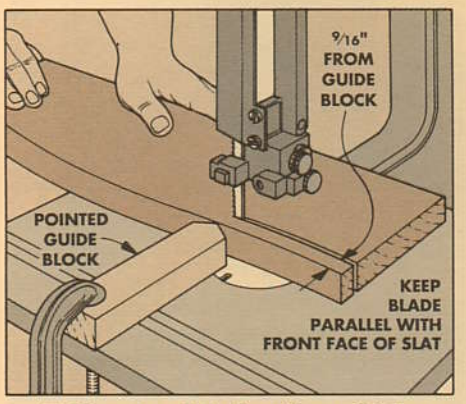

4 *To cut a slat of uniform thickness, clamp guide block with a pointed end 9/16" away from the saw blade. Then trim off slat between guide block and blade.*

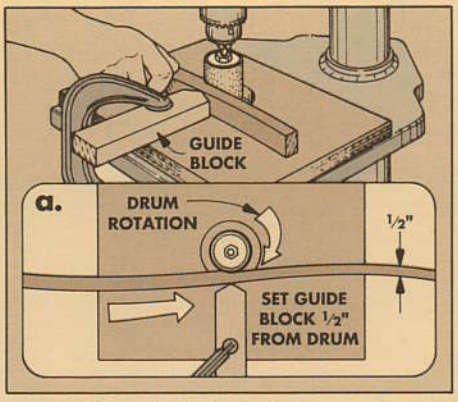

5 *After all six back slats are cut, sand to final thickness by feeding them between a drum sander and a guide block clamped to the drill press table.*

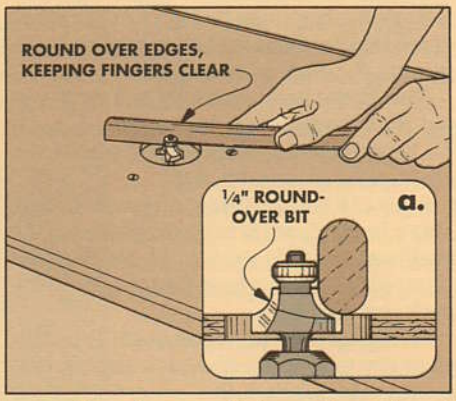

6 *Round over all four edges of each back slat with a 1/4" round-over bit on the router table. Rout with the piece on edge keeping fingers away from the bit.*

BACK RAILS

To mount the back slats, the back rails have to be made a little thicker than those on the ladder-back chair.

BACK SEAT RAIL. First, cut the **back seat rail (E)** 2" wide and 16½" long, but leave it a full ¾" thick, see Fig. 7. Then cut ¾"-long tenons on both ends of the rail.

BACK TOP RAIL. Next, cut the curved **back top rail (G)** following the same procedure used for the back slats on the ladder-back chair (refer to page 16), but make it thicker by setting the pointed block 13/16" from the band saw blade. After filing it smooth, this will make the back top rail about ¾" thick, see Fig. 7.

LAY OUT MORTISES. After these two rails are cut, lay out the mortises for the vertical slats. To do this, align the two rails and use a square to mark the mortises directly across from each other, see Fig. 7.

DRILL MORTISES. Now drill out 7/16"-deep mortises with a ½" bit on the drill press. Since the back seat rail (E) is straight, clamp a straightedge to the drill press table to keep the mortises centered on the workpiece. But on the curved top rail (G) you will have to run the workpiece against a dowel stop pin as when mortising the back legs, see Fig. 8.

ROUND OVER EDGES. After the mortises are drilled (don't square them up), round over the edges of both rails with a ¼" round-over bit, see Fig. 9. Then fit the slats into the mortises. If they're too tight, you may have to slightly shave the ends, see Fig. 10.

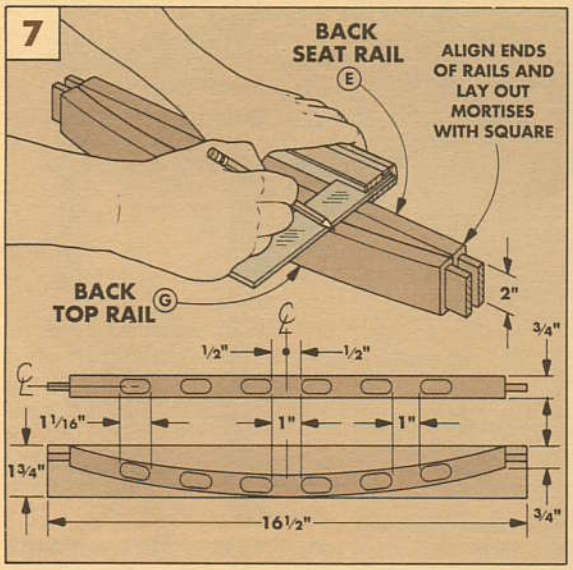

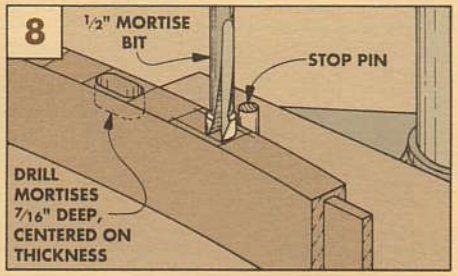

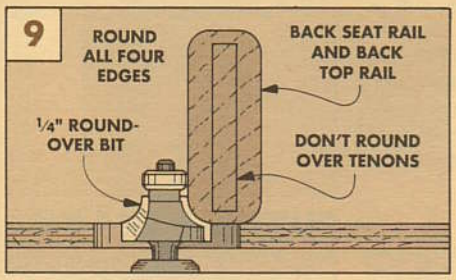

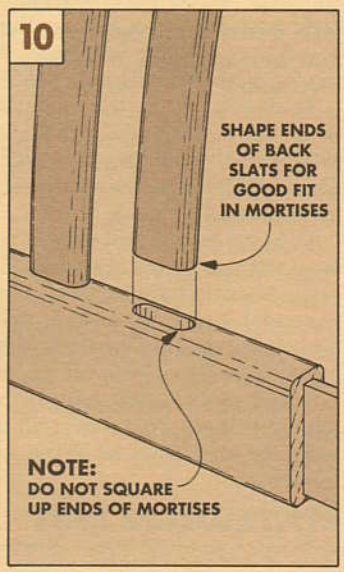

ASSEMBLY AND SEAT

When all the back slats fit into the mortises, the chair can be assembled.

ASSEMBLY. Start by gluing a front leg, side rails, and back leg to form a side unit. After assembling the other side unit, set both units aside to dry.

Next, dry assemble the vertical back slats (H) into the back rails (G,E). The slats aren't glued in since there isn't anywhere they can go once the chair is assembled.

Now fit the back assembly and front seat rail (F) between the side units, see Fig. 11. To keep the chair sitting flat, I placed the chair on top of my table saw.

BACK CLEAT. After the chair is assembled, glue a **back cleat (I)** to the front face of the back seat rail (E), see Fig. 13. Position the cleat so it's ¼" down from the top edge of the back seat rail.

SEAT. Since the **plywood seat (J)** on this chair has to fit *inside* the back slats, it's cut shorter (14⅞") than the ladder-back chair and rests on the cleat, see Figs. 12 and 13.

After the chair is finished and the seat upholstered, the seat can be screwed down to the cleat and front rail.

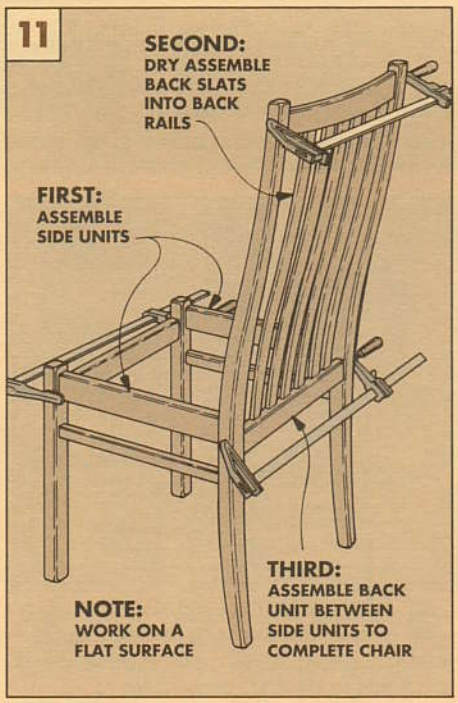

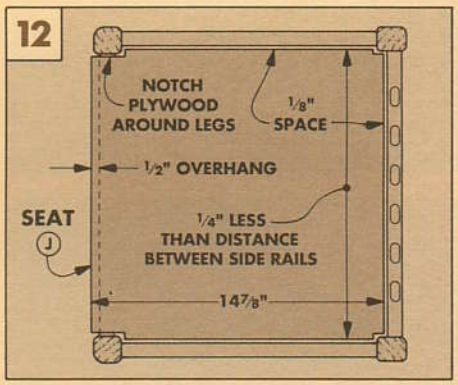

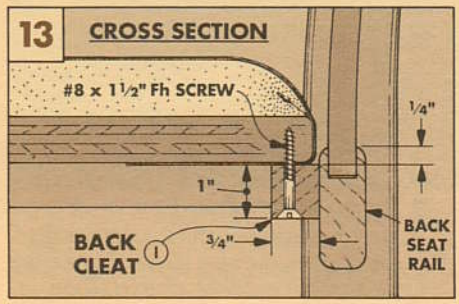

Talking Shop

MORTISING: ROUTER VS. DRILL PRESS

■ *Why does* Woodsmith *usually show mortises being cut on a drill press? Have you considered cutting them on the router table by plunging the wood piece down on the bit?*

John H. Righi
Onekama, Michigan

Without a doubt, it's easier to get a *cleaner* mortise with a router bit. But I still usually drill them out by making a series of holes with the mortise bit and technique shown on page 10 of this issue. Then I clean up the cheeks of the mortise by making repeated cuts with the mortise bit, or I use a sharp chisel.

So, why not use the router table and save all the trouble? There are a number of problems you can encounter when cutting mortises on the router table.

DEPTH LIMITATIONS. First, the mortise is limited in depth to the length of your router bit and how high the bit will stick above the top of your router table. A drill bit can usually cut a deeper mortise.

REPEAT PASSES. Next, unless the mortise is shallow, you will probably have to rout it in a number of successively deeper passes to keep from burning.

If you have to make a number of passes, sometimes the second pass is cut in a slightly different position from the first pass (resulting in a stepped mortise).

This happens with some routers because there's so much play in the depth tightening mechanism. As you increase the depth of cut and retighten the base collar around the motor, the bit won't be in the exact same position and cuts at a slightly different point. (This doesn't happen with a plunge router.)

HIDDEN CUT. Also, when mortising on a router table you have to plunge the workpiece down over the bit. You can't see whether you are routing exactly where you want the mortise. One solution is to clamp start and stop blocks to your router table, but this can be time consuming to get these accurate.

BIT CONCERNS. Finally, most standard straight router bits (except spiral end mills and special mortising bits) are made to cut on the *side* of the bit, not the *end* like a drill bit. This means that the plunging operation can be especially hard on the bit.

SOMETIMES I DO ROUT. Okay, would you ever consider using a router to cut mortises? If the mortise is shallow enough (¼" or less) to rout in one pass, and I'm working with a number of pieces which need mortises in exactly the same locations, yes, I probably would use the router table. Because then the time of setting up start and stop blocks is justified.

MITER JIG REVISITED

■ In *Woodsmith* No. 60 we featured a shop-made miter jig that was a little different from other miter jigs we had seen. Since that article appeared last winter, we've received a number of letters and calls about the jig, and we've had the opportunity to use it in our shop for over a year.

The general consensus is that it's one of the easiest and most accurate jigs for cutting miters. But we've also heard of a problem: occasionally a waste piece will kick back as it falls off the jig.

The jig consists of a ¾" plywood base that's guided on the table saw with a hardwood runner in the miter gauge slot. It runs on the left side of the saw blade and the waste piece falls away to the right of the blade.

WHY THE KICKBACK? The problem seems to come when cutting the second miter at the back of the jig. Since the finished piece is on the jig, it's always cut off clean. But the waste piece doesn't have any support.

What happens is this: There's a little triangle splinter of wood on the trailing edge of the waste piece that never gets cut completely off, see Fig. 1a. Since there's very little support behind the waste piece at this point, the tooth doesn't cut the triangular splinter off clean.

As the blade comes around, one of the teeth can hook onto that little splinter. If it catches it just right, it can throw the waste piece down against the table and then the piece can bounce back (kickback), see Fig. 1.

KICKBACK VARIES. We've tried to produce the kickback on all kinds of woods, saw blades, and molding profiles. Sometimes it kicks back, sometimes it doesn't. Changing the feed rate doesn't seem to help prevent it.

If there's a situation where it seems worse, it's when you have a cut-off piece about 6" long. Then it weighs enough so it's thrown out with some force.

SOLUTIONS. There are a few simple solutions to the problem. As we said in the article in No. 60, it's a good idea to start by rough cutting your pieces straight off only 1" oversize before mitering.

Also, while cutting, stand to the left of the blade. And don't let scrap pieces collect near the blade. This just provides more clutter for the waste piece to get caught up on and kick back.

The best solution is to attach a plywood platform to the *right* of the blade, see Fig. 2. The platform should be the same thickness as the jig base. Then as the waste pieces are cut away they won't fall down off the jig.

To hold the plywood in position on top of the saw table (it doesn't slide with the jig), I screwed a runner under the plywood for a tight friction fit in the right miter gauge slot.

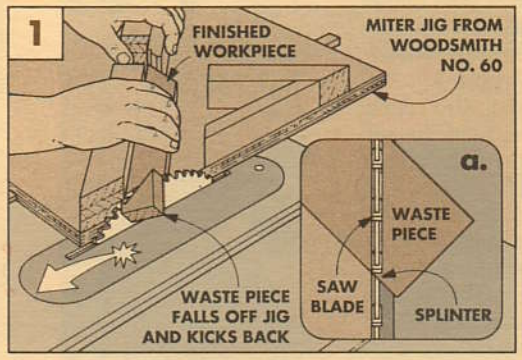

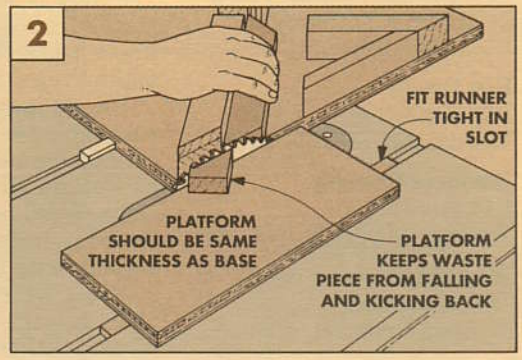

Sources

CHAIR UPHOLSTERY

In addition to the lumber, plywood, and screws, the only supplies needed for the chairs are for the upholstery. (For more information, see page 19.)

When I upholstered the chairs I used professional quality materials. The cost of these materials may seem a little high in the beginning, but I feel that it's worth it in the end.

THE FOAM. The 2" polyurethane foam that I used for the seat padding is sold in a standard sheet size of 24" x 108". That's enough for six chairs and it cost $30 at a local upholstery shop.

THE FABRIC. There are so many different fabrics to choose from that I had a hard time deciding which to use. When I finally decided on the fabric, I found out it cost $25 a yard.

I thought that price seemed awfully high until it was explained to me.

Upholstery fabric comes in a standard width of 54". Since the fabric I liked was 54" wide, I only needed 2 yards of length to cover six chairs.

The total for my upholstery supplies came to about $80, or (as I like to think of it) a little under $13.50 per chair.

We have listed a mail order source for foam padding, see Catalog Sources below. Look for code *CF* after the address.

CHAIR PATTERN

Woodsmith Project Supplies is offering a full-size pattern for the chair parts. The pattern includes a leg profile with all the mortise locations marked, plus a pattern for both the horizontal back slats and the vertical back slats.

Chair Pattern

- **764-300** Chair Pattern. $3.95

MORTISING BITS

The Vermont American mortising bits that we talked about on page 10 are available as a set or individually through **Woodsmith Project Supplies,** or from the source listed below. (Vermont American calls these bits a "Forstner Type" bit.) Look for the code *MB* after the supplier's address.

Mortising Bits

- **278-654** Bit Set.....$25.95
  (1) 1/4" Mortising Bit
  (1) 3/8" Mortising Bit
  (1) 1/2" Mortising Bit

Individually priced Mortise bits.

- **278-647** 1/4" Bit.....$7.95
- **278-650** 3/8" Bit.....$8.95
- **278-653** 1/2" Bit.....$9.95

HANGER BOLTS

The hanger bolts that I used on the Dining Table are 5" long. These 5" bolts are available through **Woodsmith Project Supplies.**

Hanger Bolts

- **764-100** Bolts.....$3.95
  (4) 3/8" x 5" Hanger Bolts with nuts and washers.

Some local hardware stores may carry hanger bolts, but they may only be 4" long. You can counterbore the hole on the back of the corner block to a depth of 1". Then you will get the same threads into the leg.

ROUTER BITS

Woodsmith Project Supplies is offering a collection of high quality router bits needed to make the chairs and table in this issue. All of these bits have carbide cutters and steel bearings.

Router Bits

- **271-885** Flush Trim... $16.95
  This bit has a 1" cutter length and a 1/4" shank.
- **271-811** 1/8" Rndover. $23.95
  1/4" Shank
- **271-821** 1/8" Rndover. $26.95
  1/2" Shank
- **271-814** 1/4" Rndover. $23.95
  1/4" Shank
- **271-823** 1/4" Rndover. $24.95
  1/2" Shank
- **764-200** 1/2" Rndover. $26.95
  1/4" Shank
- **764-250** 1/2" Rndover. $28.95
  1/2" Shank

Router bits are also available from some of the suppliers listed below. See code *RB*.

ORDER INFORMATION

BY MAIL

To order by mail, use the form on the protective cover of a current issue or write your order on a piece of paper, and send it with your check or money order (please include $1.50 shipping charge with each order). IA residents add 4% sales tax. Send order to:

Woodsmith Project Supplies
P.O. Box 10350
Des Moines, IA 50306

BY PHONE

For faster service use our Toll Free order line. Phone orders can be placed Mon. thru Fri., 8:30 AM - 4:30 PM CST.

Before you call please fill out the order form completely. VISA or MC orders only.

1-800-444-7002

Allow 4 to 6 weeks for delivery. Note: Prices subject to change after 12/89.

ALTERNATE CATALOG SOURCES

Similar hardware and supplies may be found in the following catalogs. However styles and sizes may vary. Please refer to each catalog for ordering information.

Grizzly Imports
P.O. Box 2069
Bellingham, WA 98227...*RB*

M.L.C.S. Limited
P.O. Box 4035
Rydale, PA 19046...*RB*

The Source
7305 Boudinot Drive
Springfield, VA 22150...*RB*

Van Dyke's
P.O. Box 278
Woonsocket, SD 57385...*CF*

Woodcraft Supply
P.O. Box 4000
Woburn , MA 01888...*MB, RB*

Woodline
1731 Clement Ave.
Alameda, CA 94501...*RB*

PROJECT SUPPLY UPDATE

The Old Fashioned Wall Phone featured in *Woodsmith* No. 42 is now available through **Woodsmith Project Supplies.**

The kit includes: the reproduction hardware, the electronic parts on the inside of the phone as well as all the wires and plugs. (Wood not included.) Included are instructions for building and wiring the phone.

Note: We're offering the phone in touch-tone only.
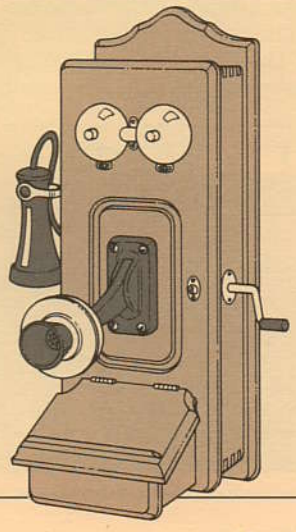
- **742-100** Phone Kit ...$139.95